Autonomous Vehicle

25 steps · 25 parts

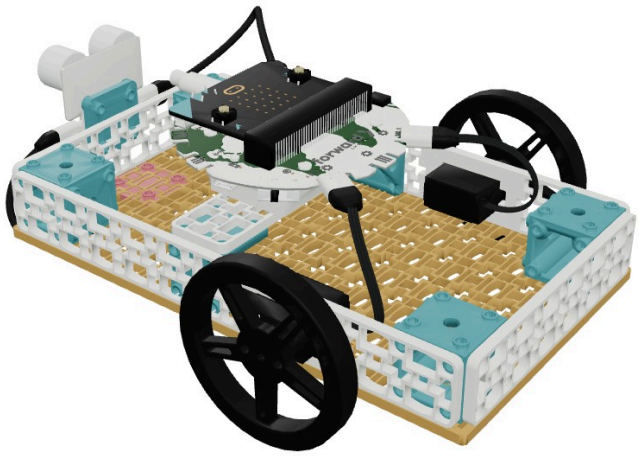

You will need

- 1 × Base Plate
- 4 × Cube Connector
- 2 × Corner Connector
- 3 × Medium Frame
- 2 × Long Frame
- 2 × Continuous Servo Motor
- 1 × Line (Infrared) Sensor
- 1 × Sonar Sensor
- 1 × Long Cable Connector
- 1 × micro:bit

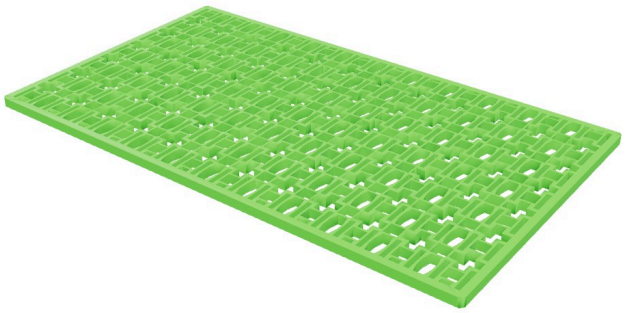

1

Start with the Base Plate.



1 × Base Plate

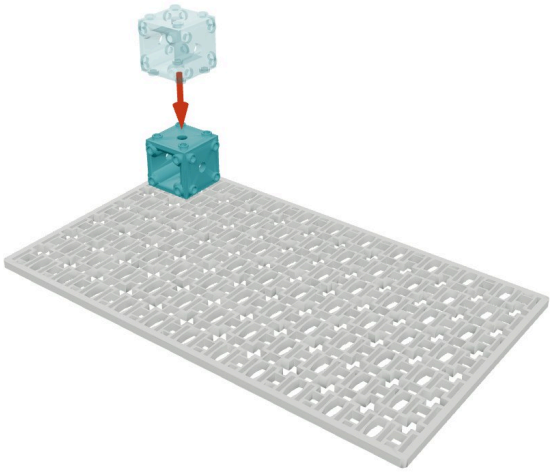

2

Add a Cube Connector to one corner of the Base Plate.



1 × Cube Connector

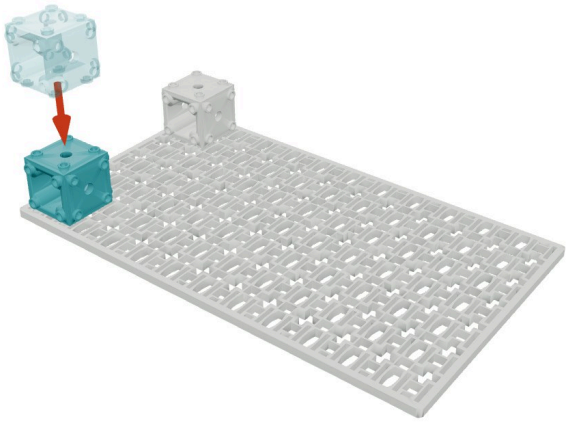

3

Add a Cube Connector to the next corner of the Base Plate.



1 × Cube Connector

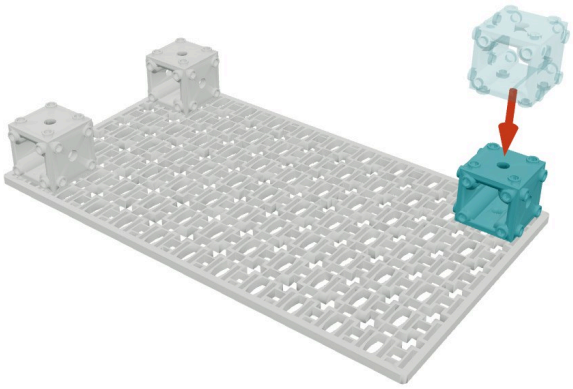

4

Add a Cube Connector to the next corner of the Base Plate.



1 × Cube Connector

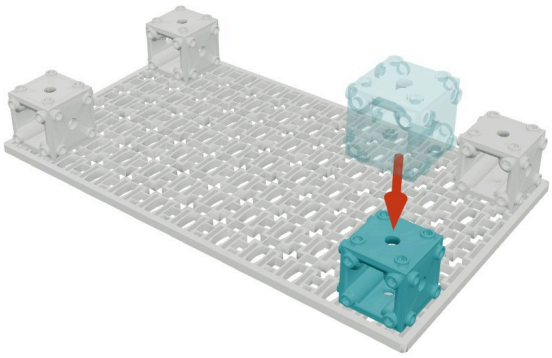

5

Add a Cube Connector to the last corner of the Base Plate.



1 × Cube Connector

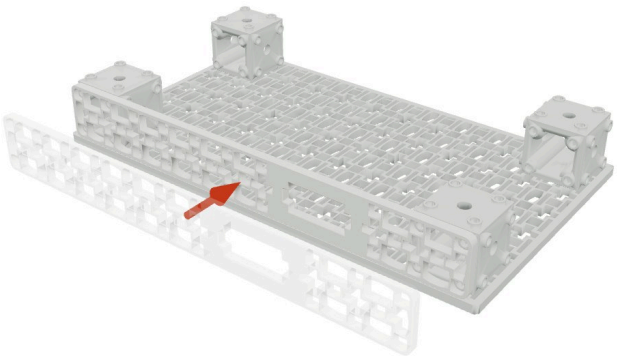

6

Add a Long Frame along the long edge of the Base Plate.



1 × Long Frame

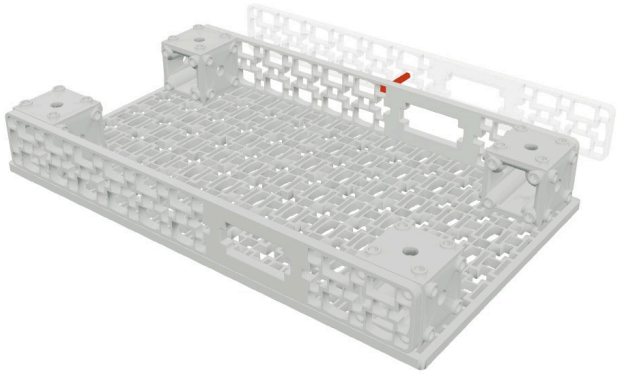

7

Add another Long Frame along the long edge of the Base Plate. Make sure the Servo Motor holes are at the same end.



1 × Long Frame

90°

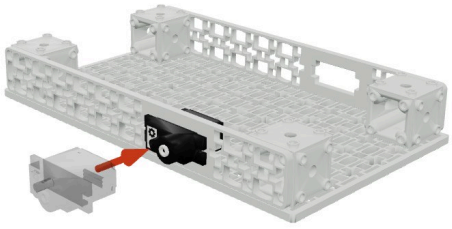

8

Turn your build a quarter turn anticlockwise

Insert the Servo Motor cable through the hole in the Long Frame. Then push the Servo Motor into place.



1 × Continuous Servo Motor

180°

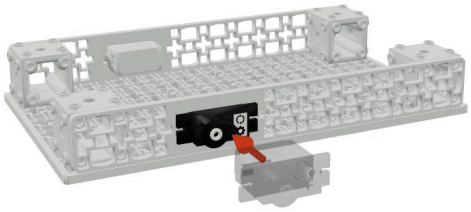

9

Turn your build around

Insert the Servo Motor cable through the hole in the Long Frame. Then push the Servo Motor into place.



1 × Continuous Servo Motor

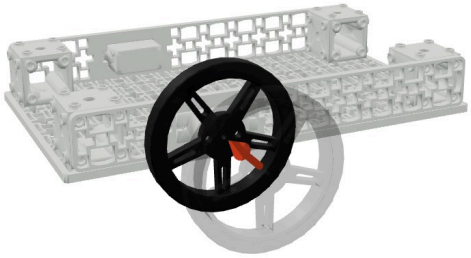

10

Attach a Wheel on the axle of the Servo Motor. Use the included screws and screwdriver to attach them securely.



1 × Wheel

180°

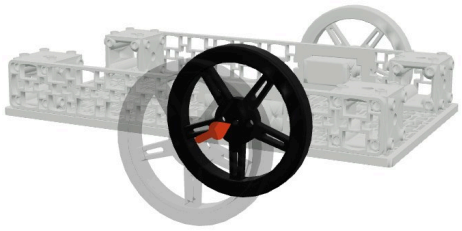

11

Turn your build around

Attach the other Wheel on the axle of the other Servo Motor. Use the included screws and screwdriver to attach them securely.



1 × Wheel

12

Attach a Corner Connector to the center of the Long Frame, with one flat side facing up.

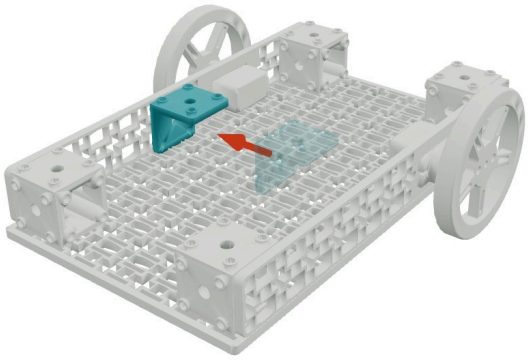

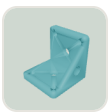

1 × Corner Connector

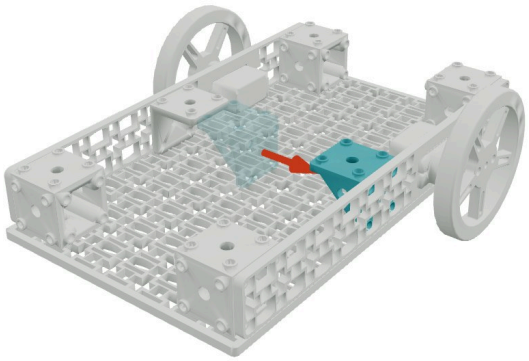

13

Attach another Corner Connector to the center of the other Long Frame, with one flat side facing up.

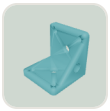

1 × Corner Connector

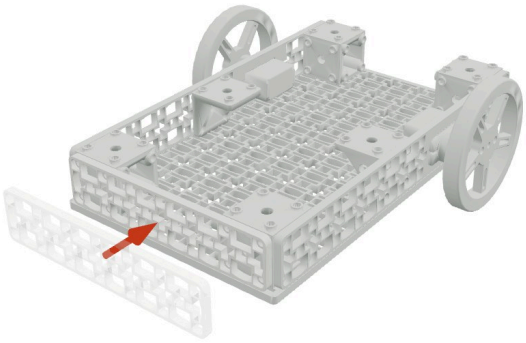

14

Add a Medium Frame across the top of the two Corner Connectors to attach them.



1 × Medium Frame

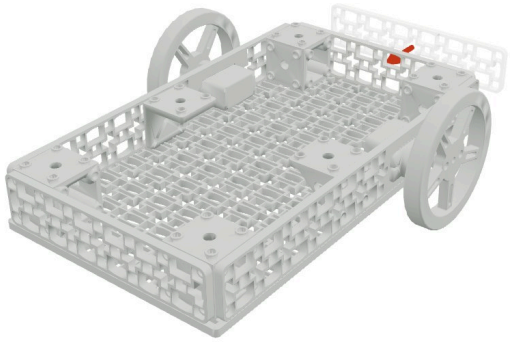

15

Attach a Medium Frame across the short edge of the Base Plate to attach the two Cube Connectors.



1 × Medium Frame

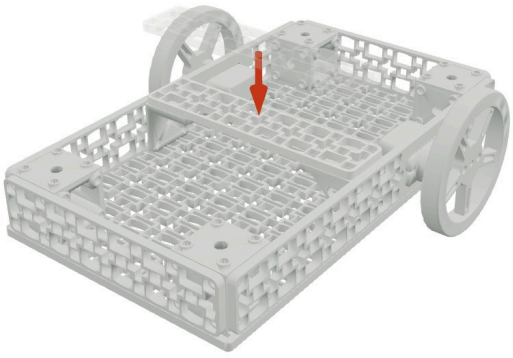

16

Attach a Medium Frame across the other short edge of the Base Plate to attach the two Cube Connectors.



1 × Medium Frame



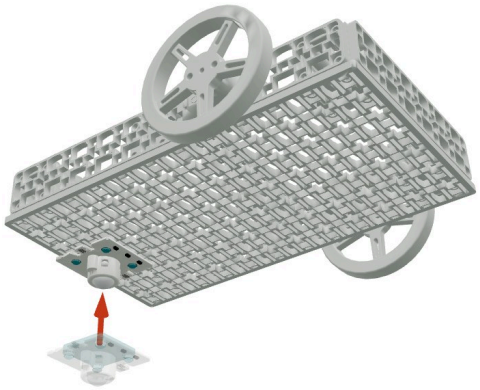

17

Turn your build over

Attach the Line Sensor to the bottom of the Base Plate, opposite the side with the Servo Motors and Wheels.



1 × Line (Infrared) Sensor



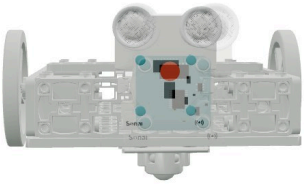

18

Turn your build a quarter turn anticlockwise

Attach the Sonar Sensor to the middle front of the assembly.



1 × Sonar Sensor

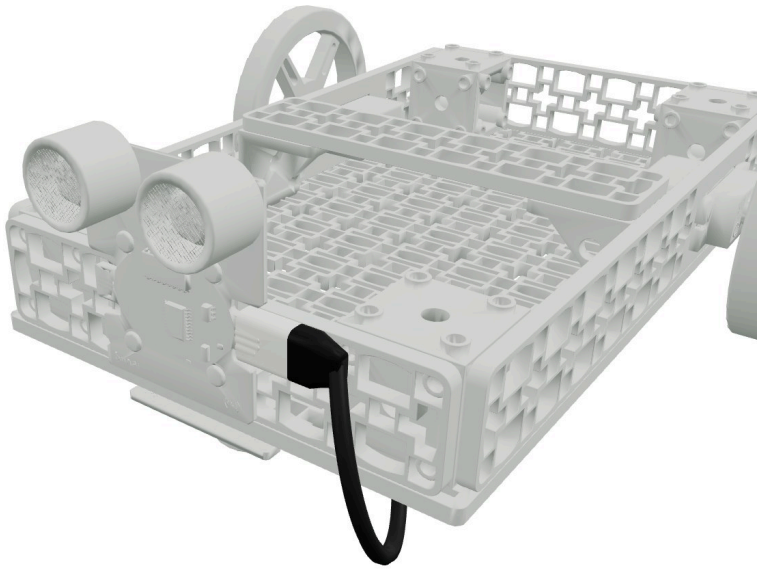

19

🔌 Use a Short Cable to attach the Line Sensor and Sonar Sensor.



1 × Short Cable Connector



20

Look at your build from above

Attach the Breakout Board to the Medium Frame across the top of the assembly. Make sure the Servo Motor ports are facing the Servo Motors and Wheels.

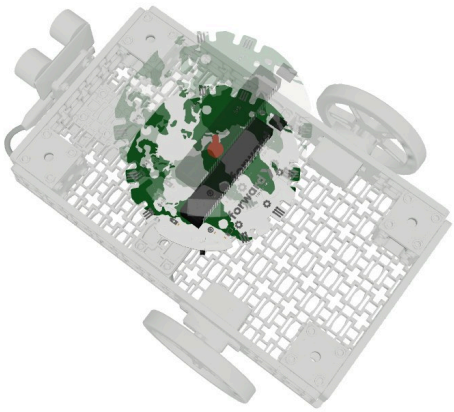



1 × Breakout Board (empty)

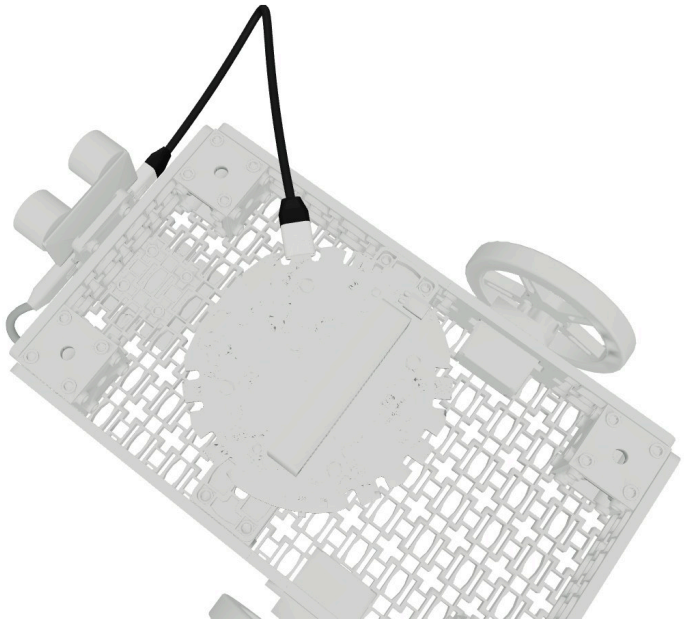

21

🔌 Use a Long Cable to attach the Sonar Sensor to a Sensor port on the Breakout Board.



1 × Long Cable Connector

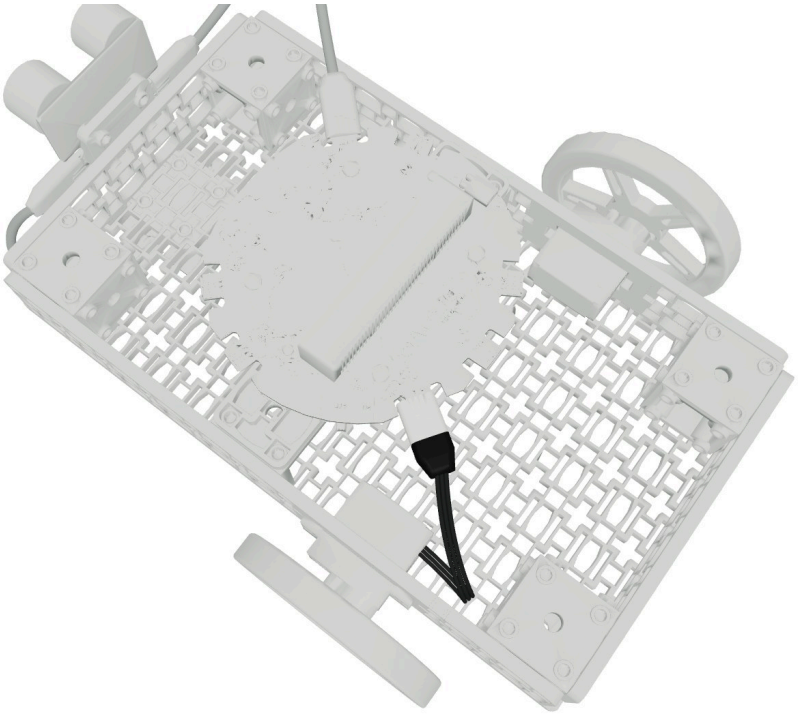

22

🔌 Connect the Servo Motor cable to the closest Servo Motor port on the Breakout Board. When looking top down at the assembly, the left Servo Motor should be attached to 'L' on the Breakout Board, and the right Servo Motor attached to the 'R'.

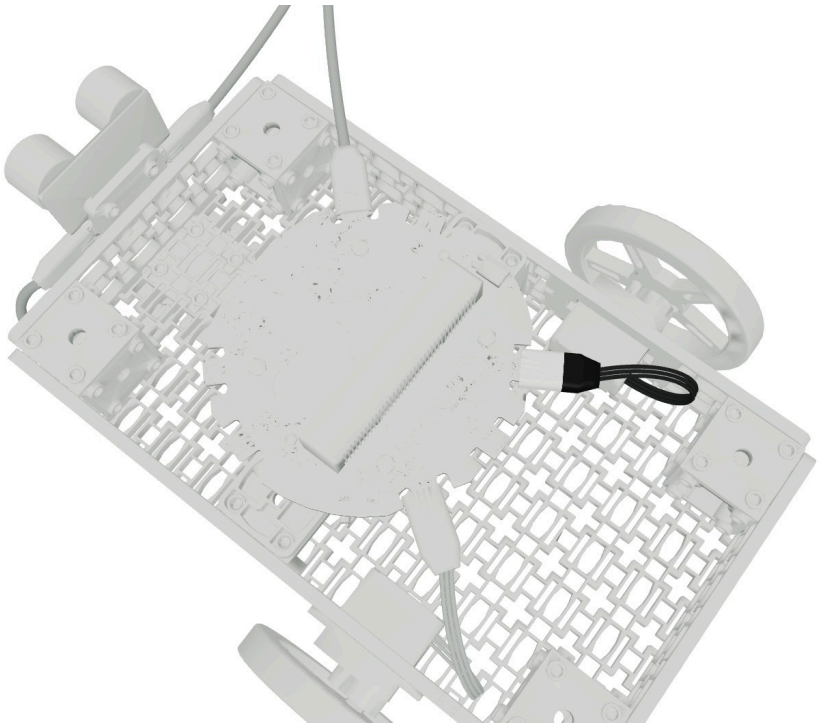

23

🔌 Connect the Servo Motor cable to the closest Servo Motor port on the Breakout Board. When looking top down at the assembly, the left Servo Motor should be attached to 'L' on the Breakout Board, and the right Servo Motor attached to the 'R'.

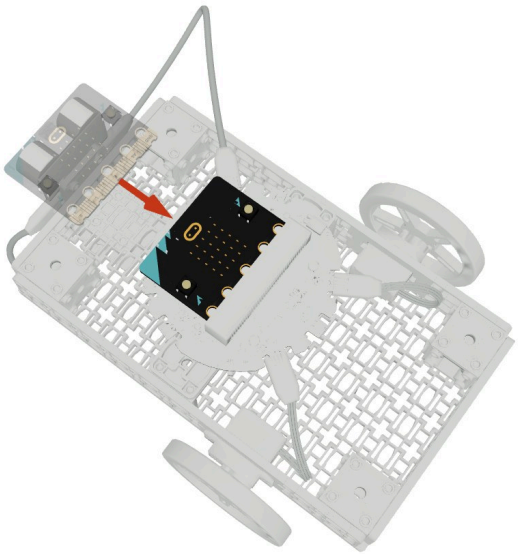

24

Insert a micro:bit into the edge connector on the Breakout Board.

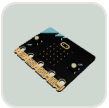

1 × micro:bit

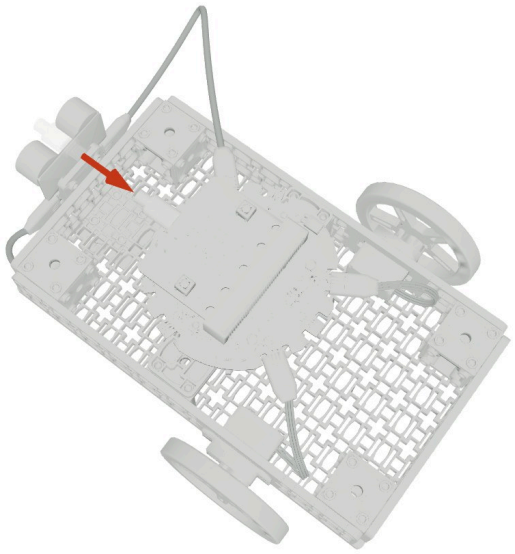

25

Connect the Micro USB Cable to the micro USB port on the micro:bit.



1 × Micro USB Cable