Ceibal Vehicle Build - Claw Grabber

19 steps · 26 parts

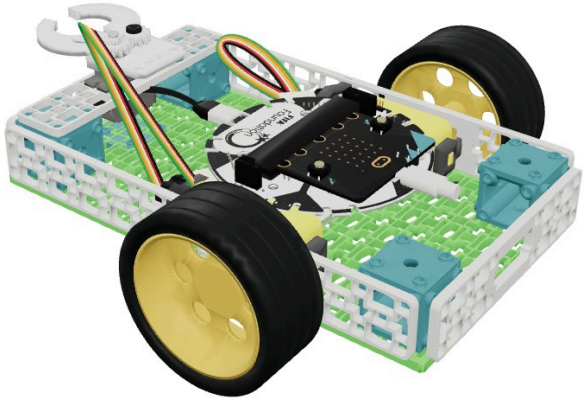

You will need

- 1 × Base Plate
- 4 × Cube Connector
- 1 × Medium Frame
- 2 × Long Frame
- 1 × Line (Infrared) Sensor
- 1 × micro:bit
- 2 × DC Motor Back Clamp
- 2 × Medium Frame (servo hole)
- 1 × Micro USB Cable
- 2 × DC Motor (yellow)

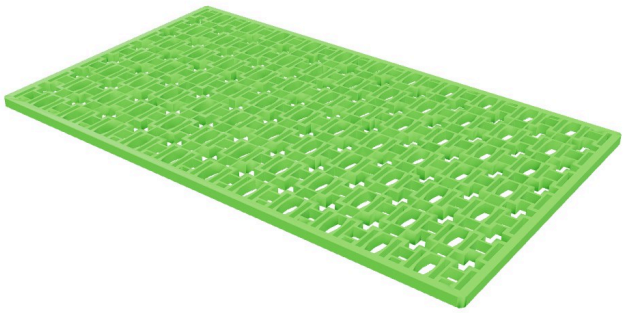

1

Start with a Base Plate



1 × Base Plate

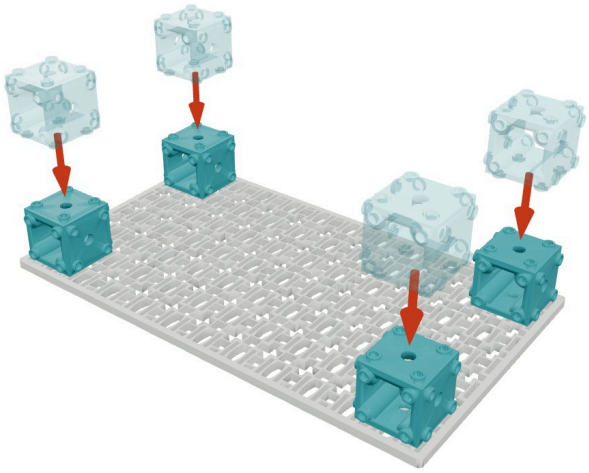

2

Attach a Cube Connector in each corner of the Base Plate



4 × Cube Connector

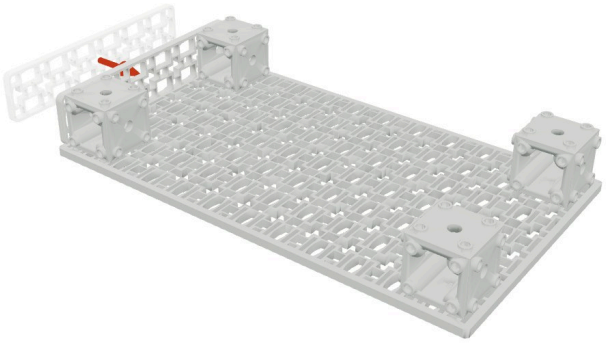

3

Attach a Medium Frame across the front using the Cube Connectors



1 × Medium Frame

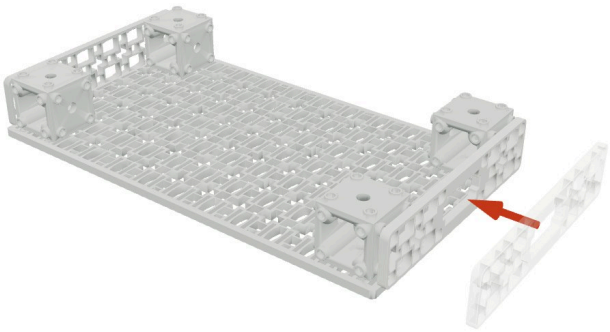

4

Attach a Medium Frame with Servo hole piece along the back using the Cube Connectors



1 × Medium Frame (servo hole)

90°

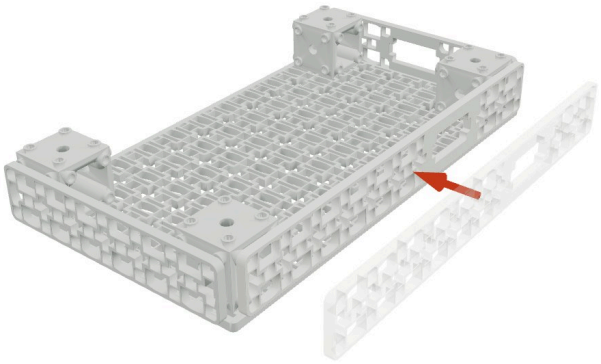

5

Turn your build a quarter turn anticlockwise

Attach a Long Frame along the side using the Cube Connectors

1 × Long Frame

180°

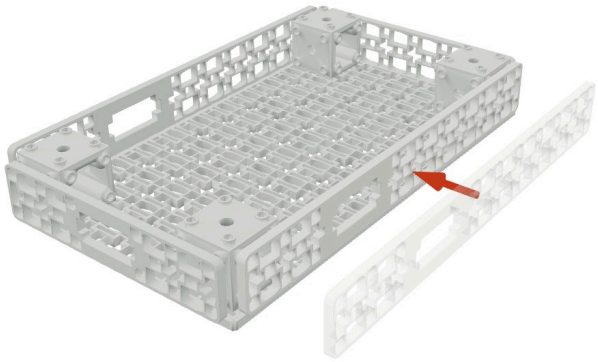

6

Turn your build around

Attach a Long Frame along the other side using the Cube Connectors (ensure the Servo holes are going the same direction)

1 × Long Frame

90°

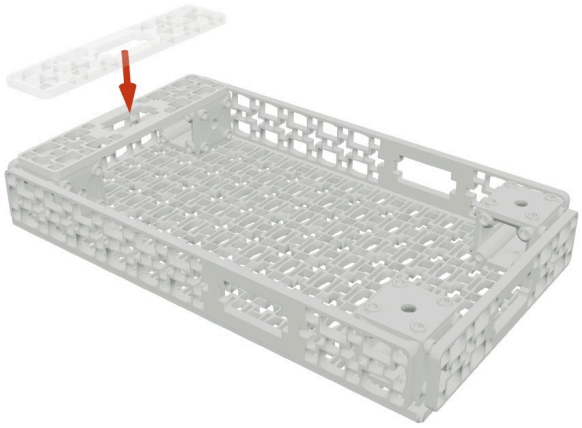

7

Turn your build a quarter turn anticlockwise

Attach a Medium Frame with Servo hole piece across the top of the two Cube Connectors (opposite the direction of the Servo holes in the Long Frames)



1 × Medium Frame (servo hole)

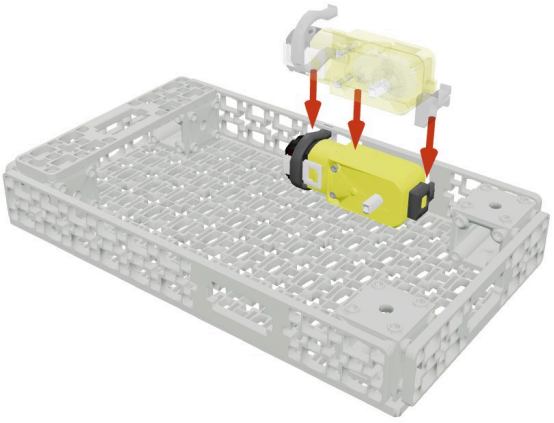

8

Using the Front Clamp & Back Clamp, attach the DC Motor to the inside of the Long Frame. Note the orientation of the motor and the position of the clamps.



1 × DC Motor (yellow)



1 × DC Motor Front Clamp



1 × DC Motor Back Clamp

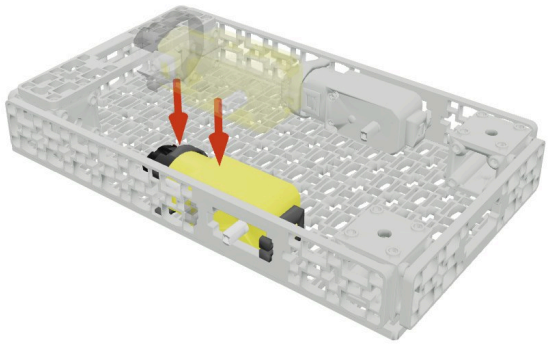

9

Using the Front Clamp & Back Clamp, attach the other DC Motor to the inside of the Long Frame. Note the orientation of the motor and the position of the clamps



1 × DC Motor (yellow)



1 × DC Motor Front Clamp



1 × DC Motor Back Clamp

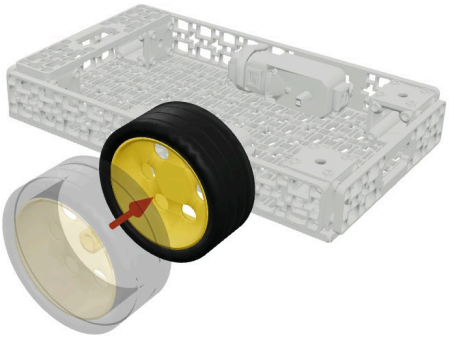

10

Align the axle on the DC Motor with the hole in the Motor wheel and push it on to attach it.



1 × Motor Wheel, 65 mm (yellow and black)

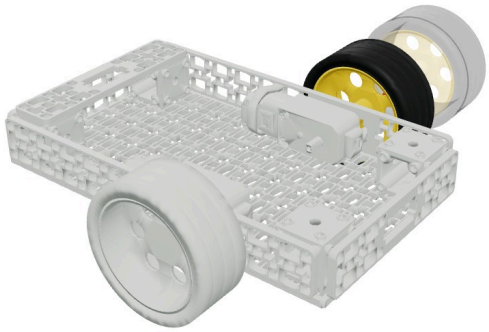

11

Align the axle of the second DC Motor with the hole in the Motor wheel and push it on to attach it.



1 × Motor Wheel, 65 mm (yellow and black)



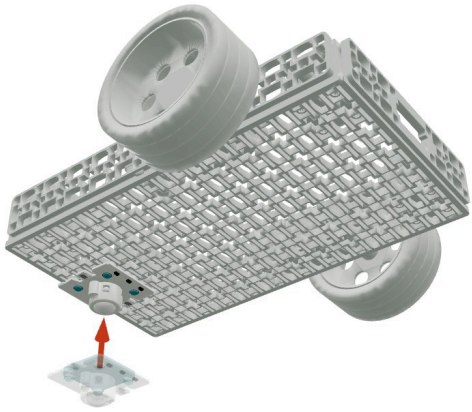

12

Turn your build over

Attach the Line Sensor to the bottom front of the assembly.



1 × Line (Infrared) Sensor



13

Turn your build back over

Place the Breakout Board within the assembly, between the two DC Motors.

1 × FIFA Foundation Breakout Board



14

🔌 Plug the DC Motor (yellow) cable into a motor port on the FIFA Foundation Breakout Board (port Motor 1)

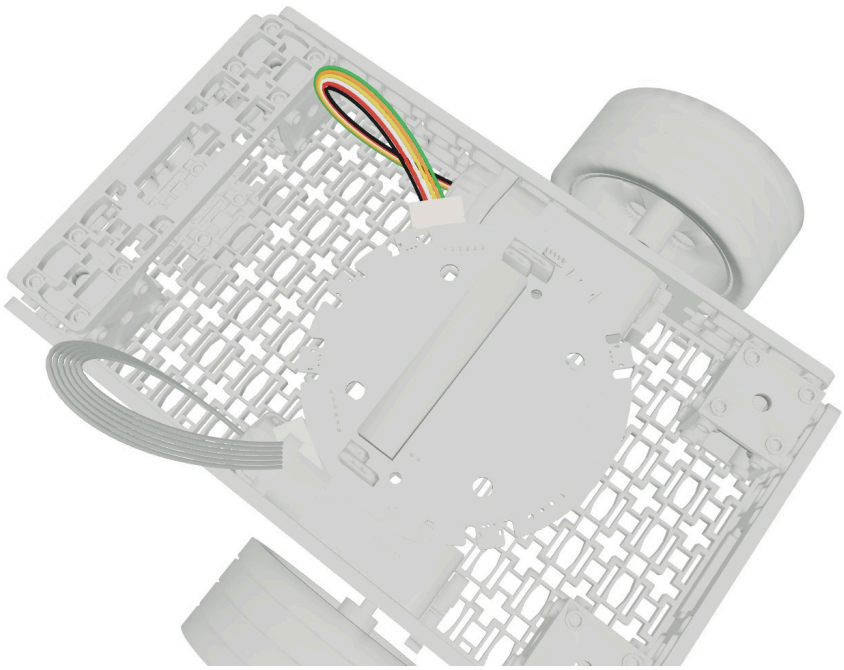

15

🔌 Plug the DC Motor (yellow) cable into a motor port on the FIFA Foundation Breakout Board (port Motor 2)



16

Add the Servo with Claw Gripper assembly to the Medium Frame with Servo hold. The cable should be inserted into the Servo hole first.



1 × Servo with Claw Gripper

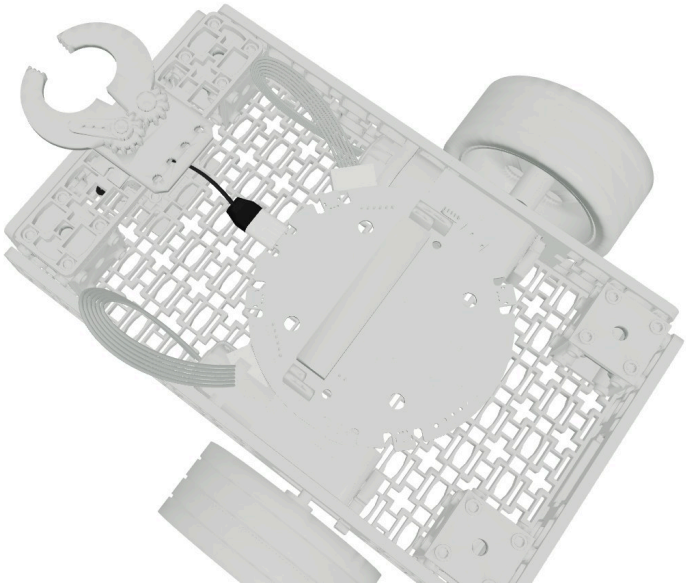

17

🔌 Connect the Servo Motor to the 'M' (middle) port on the Breakout Board.



18

Insert a micro:bit into the edge connector on the Breakout Board.

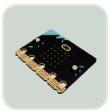

1 × micro:bit

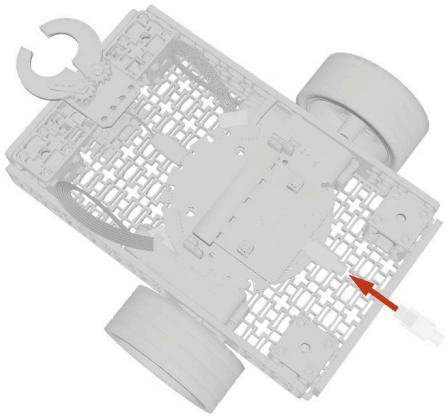

19

Insert the microUSB end of the cable into the micro:bit and connect it to your computer.



1 × Micro USB Cable