Ceibal Vehicle Build - Line Follower + Obstacle Avoidance

21 steps · 28 parts

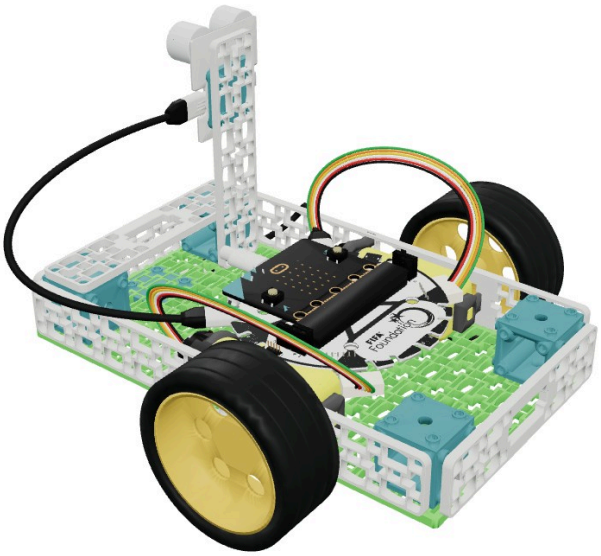

You will need

- 1 × Base Plate
- 4 × Cube Connector
- 2 × Medium Frame
- 2 × Long Frame
- 1 × Line (Infrared) Sensor
- 1 × Sonar Sensor
- 2 × Long Cable Connector
- 1 × micro:bit
- 2 × DC Motor Back Clamp
- 2 × Medium Frame (servo hole)

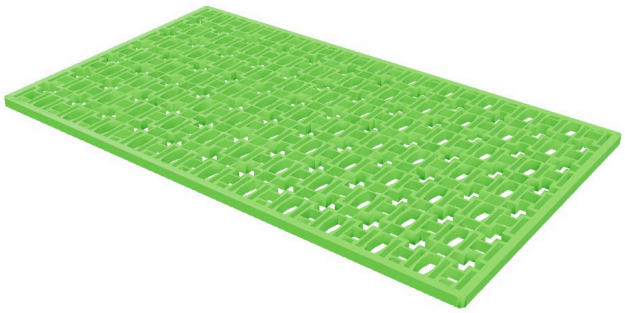

1

Start with a Base Plate



1 × Base Plate

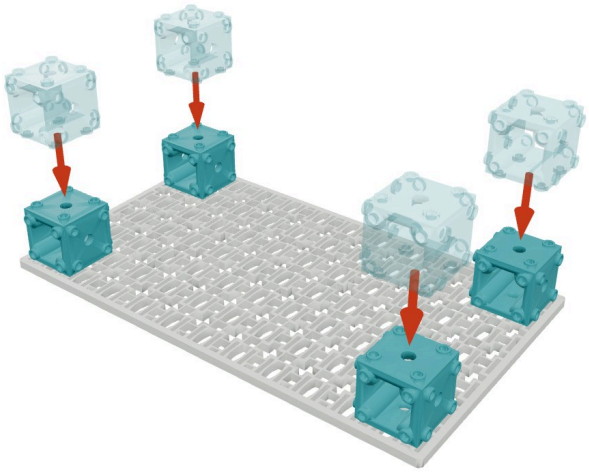

2

Attach a Cube Connector in each corner of the Base Plate



4 × Cube Connector

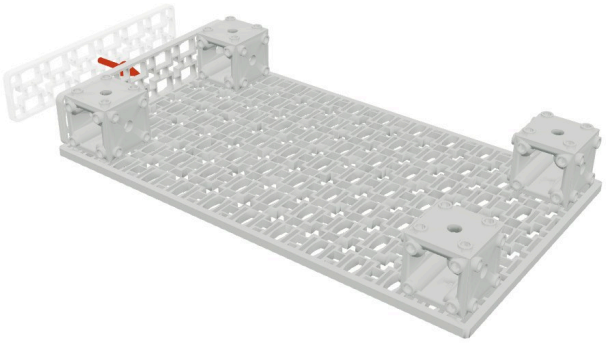

3

Attach a Medium Frame across the front using the Cube Connectors



1 × Medium Frame

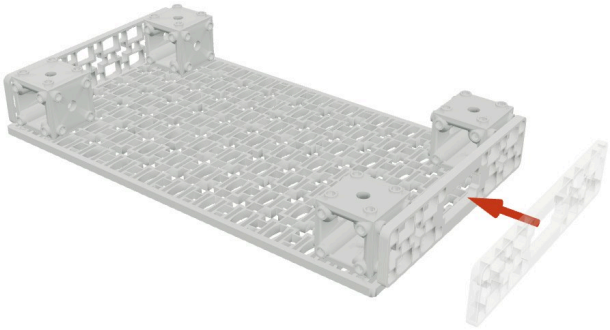

4

Attach a Medium Frame with Servo hole piece along the back using the Cube Connectors



1 × Medium Frame (servo hole)

90°

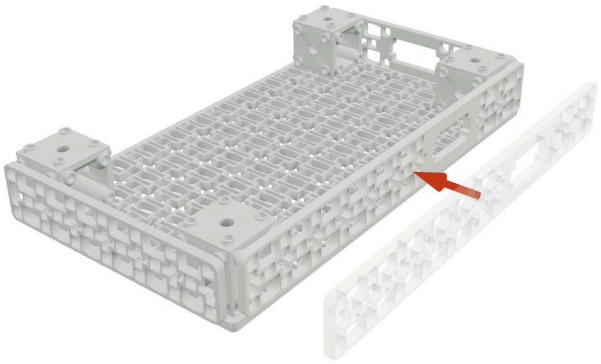

5

Turn your build a quarter turn anticlockwise

Attach a Long Frame along the side using the Cube Connectors



1 × Long Frame

180°

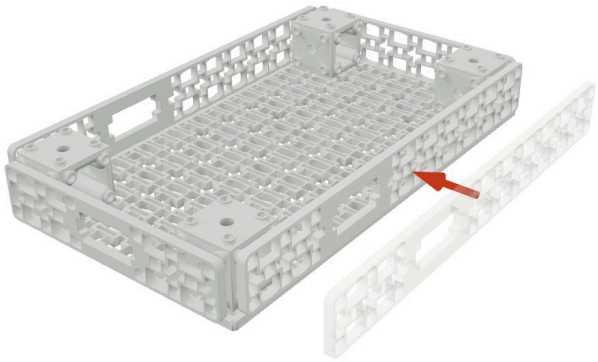

6

Turn your build around

Attach a Long Frame along the other side using the Cube Connectors (ensure the Servo holes are going the same direction)



1 × Long Frame

90°

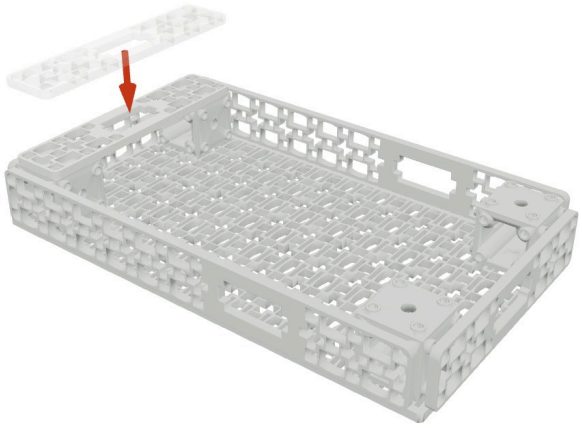

7

Turn your build a quarter turn anticlockwise

Attach a Medium Frame with Servo hole piece across the top of the two Cube Connectors (opposite the direction of the Servo holes in the Long Frames)



1 × Medium Frame (servo hole)

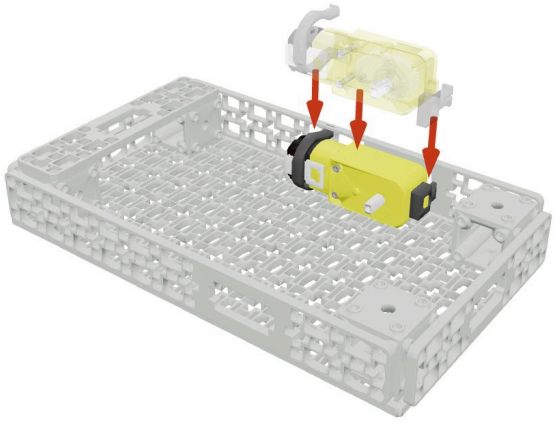

8

Using the Front Clamp & Back Clamp, attach the DC Motor to the inside of the Long Frame. Note the orientation of the motor and the position of the clamps.



1 × DC Motor (yellow)



1 × DC Motor Front Clamp



1 × DC Motor Back Clamp

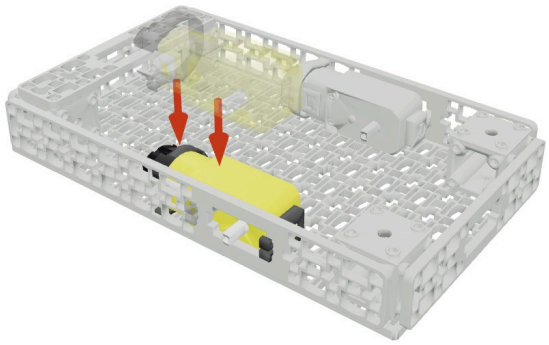

9

Using the Front Clamp & Back Clamp, attach the other DC Motor to the inside of the Long Frame. Note the orientation of the motor and the position of the clamps



1 × DC Motor (yellow)



1 × DC Motor Front Clamp



1 × DC Motor Back Clamp

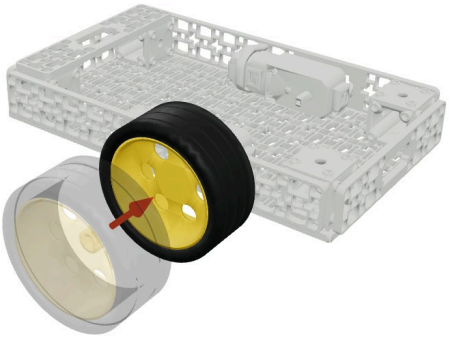

10

Align the axle on the DC Motor with the hole in the Motor wheel and push it on to attach it.



1 × Motor Wheel, 65 mm (yellow and black)

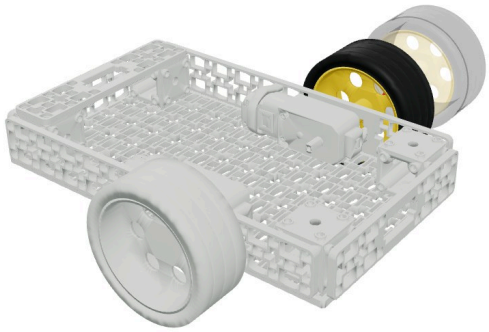

11

Align the axle of the second DC Motor with the hole in the Motor wheel and push it on to attach it.



1 × Motor Wheel, 65 mm (yellow and black)



12

Turn your build over

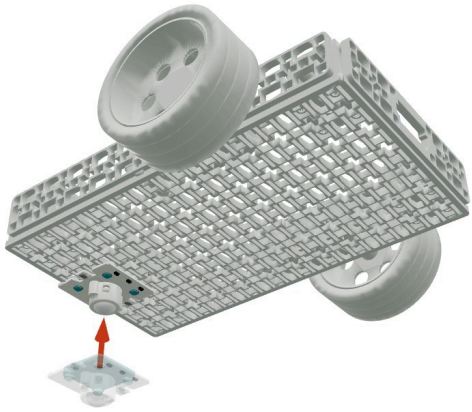

Attach the Line Sensor to the bottom front of the assembly.



1 × Line (Infrared) Sensor



13

Turn your build back over

Place the Breakout Board within the assembly, between the two DC Motors.



1 × FIFA Foundation Breakout Board

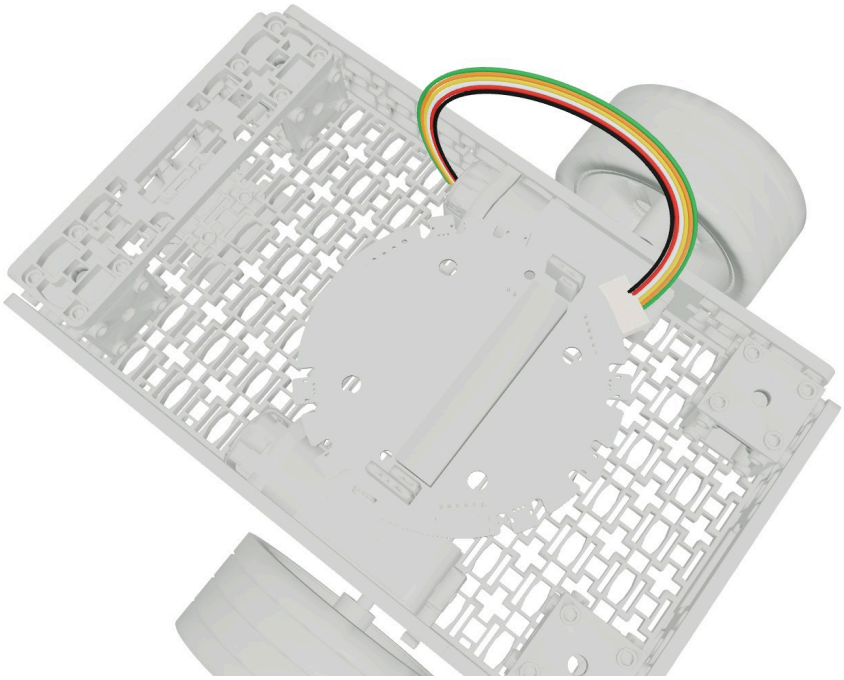

14

🔌 Plug the DC Motor (yellow) cable into a motor port on the FIFA Foundation Breakout Board (port Motor 1)

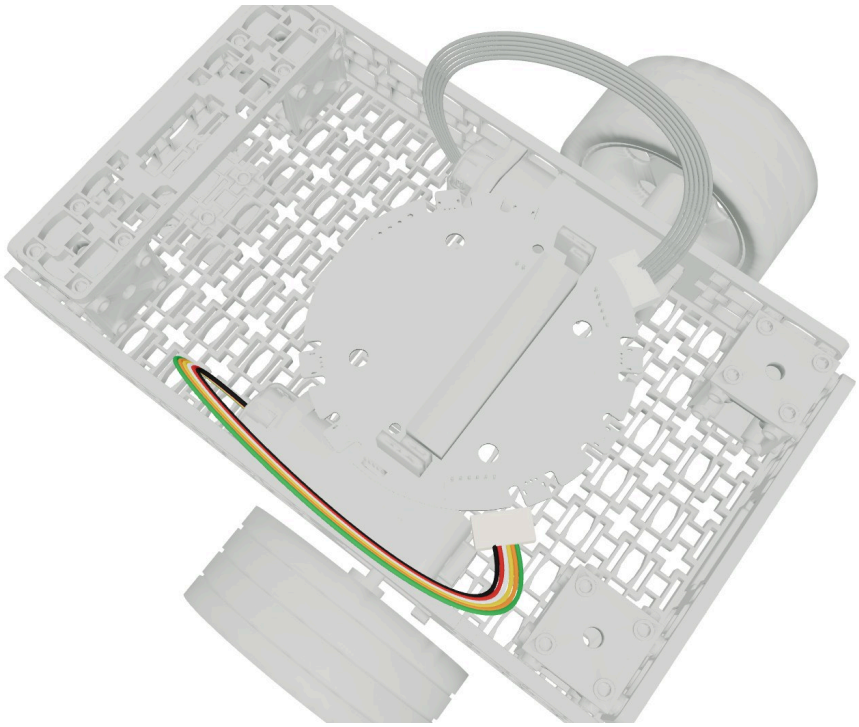

15

🔌 Plug the DC Motor (yellow) cable into a motor port on the FIFA Foundation Breakout Board (port Motor 2)

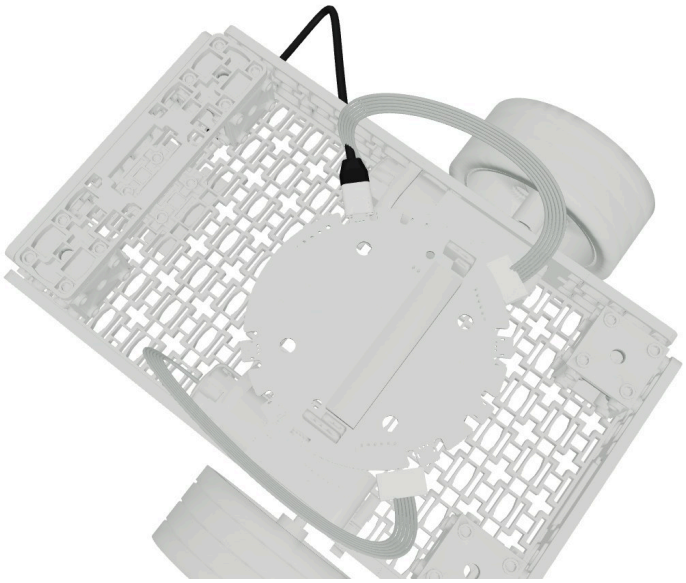

16

🔌 Connect the Line (Infrared) Sensor to the FIFA Foundation Breakout Board with a long cable (port Sensor 3)



1 × Long Cable Connector

180°

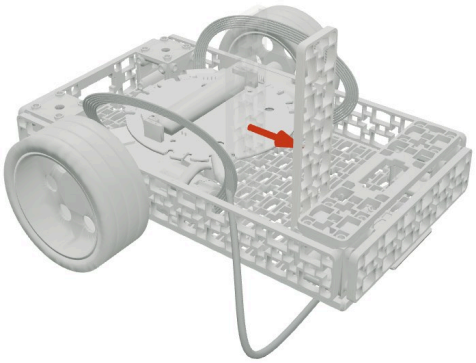

17

Turn your build around

Attach a Medium Frame, positioned vertically, to one of the Cube Connectors at the front of the assembly



1 × Medium Frame

18

Attach a Sonar Sensor to the top of that Medium Frame.

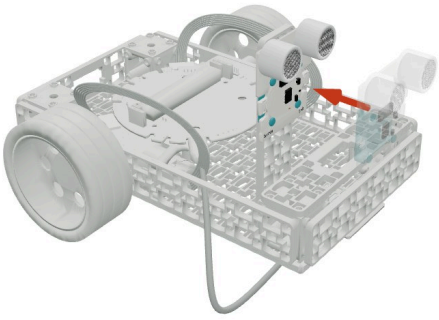



1 × Sonar Sensor

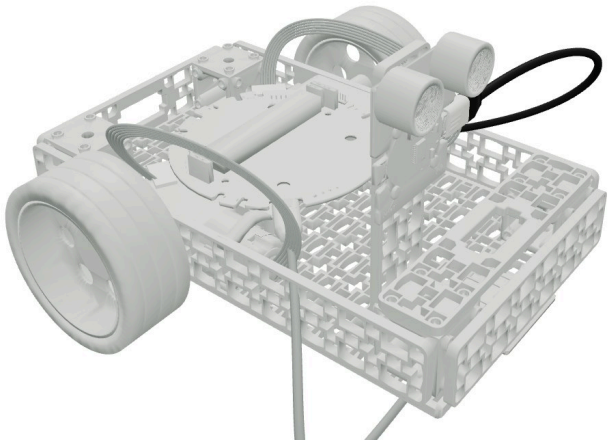

19

🔌 Use a long Cable to connect the Sonar Sensor to one of the Sensor Ports on the Breakout Board



1 × Long Cable Connector

20

Look at your build from above

Insert a micro:bit into the edge connector on the Breakout Board.

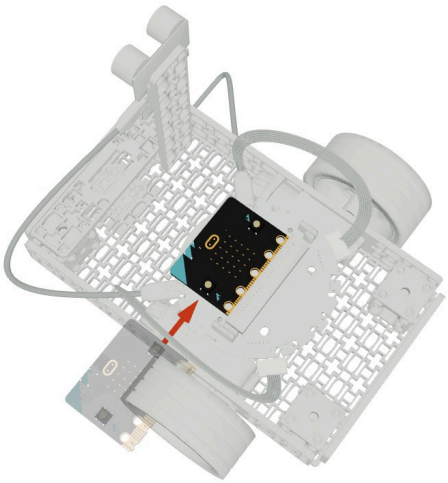

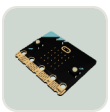

1 × micro:bit

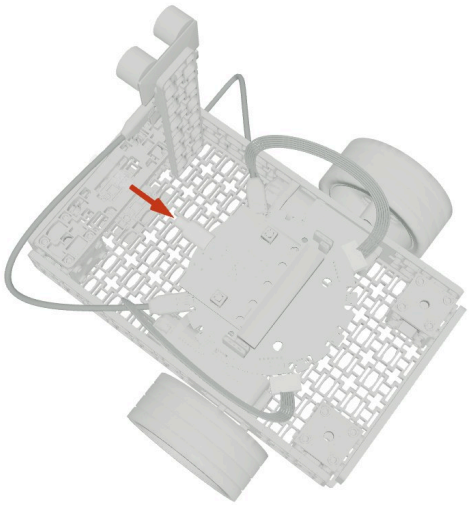

21

Insert the microUSB end of the cable into the micro:bit and connect it to your computer.



1 × Micro USB Cable