Sun Solar Energy with Solar Panels

19 steps · 19 parts

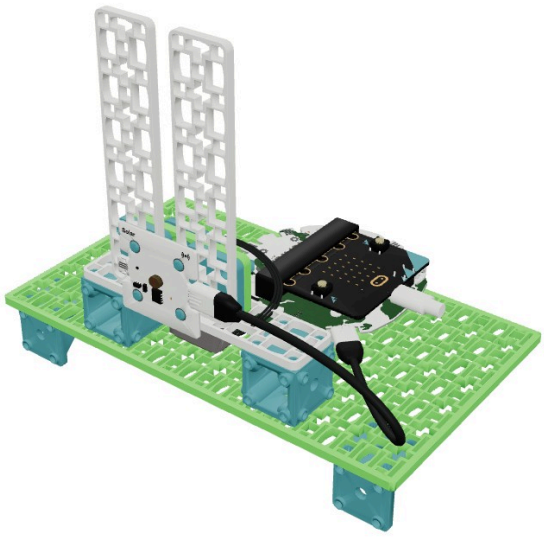

You will need


1 × Base Plate


2 × Cube Connector

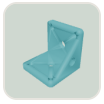
3 × Corner Connector


2 × Back-to-Back Connector


1 × Small Frame


2 × Medium Frame

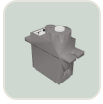
1 × Positional Servo Motor


1 × Solar Sensor


1 × Long Cable Connector

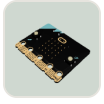
1 × micro:bit

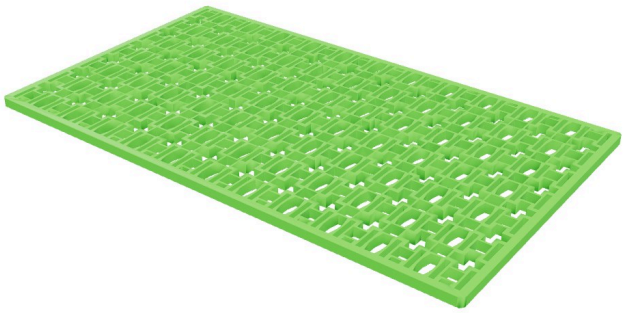

1

Start with a Base Plate.



1 × Base Plate

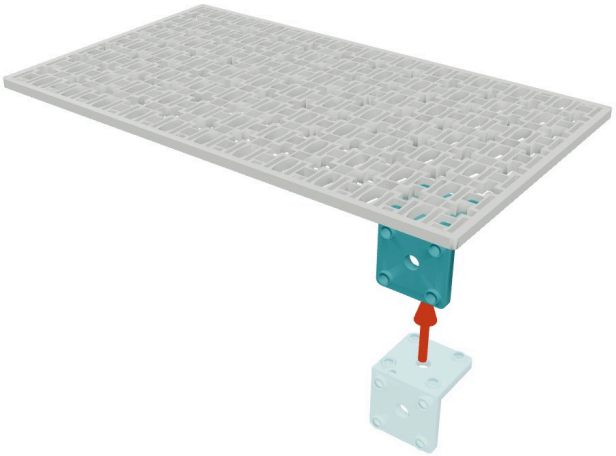

2

Add a Corner Connector to one corner of the Base Plate.

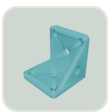

1 × Corner Connector



3

Add a Corner Connector to the other corner of the Base Plate. This should allow your assembly to sit on a slight angle.

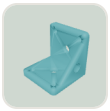

1 × Corner Connector

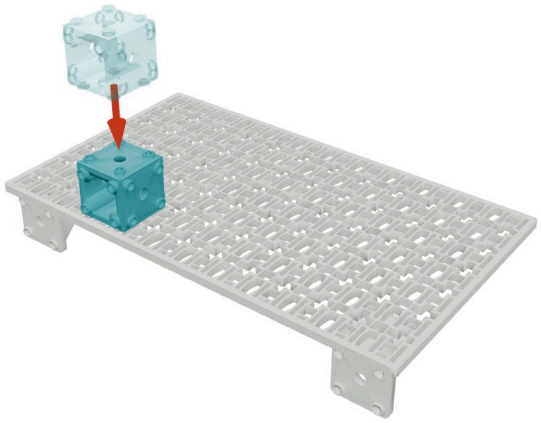

4

Add a Cube Connector to the top of the Base Plate, along the front edge.



1 × Cube Connector

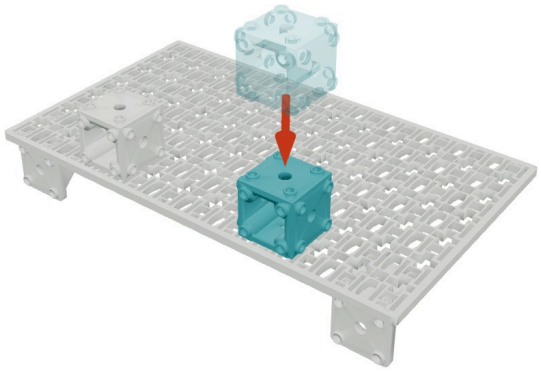

5

Add another Cube Connector opposite the first one, along the front edge.



1 × Cube Connector

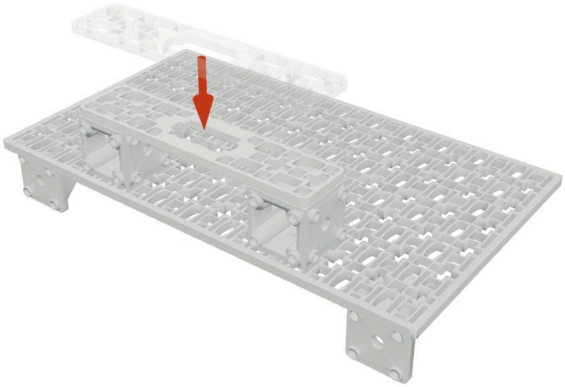

6

Attach a Medium Frame with a Servo hole across the top of the two Cube Connectors.



1 × Medium Frame (servo hole)

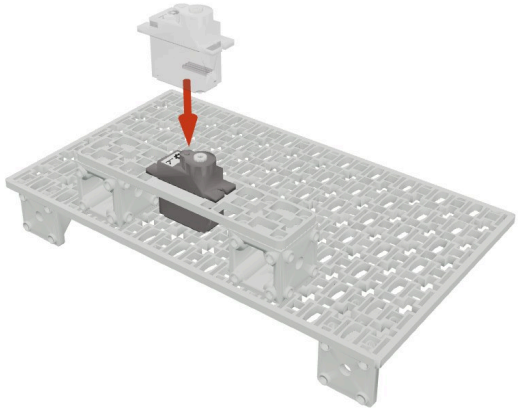

7

Insert the Positional Servo Motor's cable through the hole in the Medium Frame. Then push the Servo Motor into the hole.

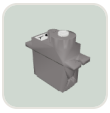

1 × Positional Servo Motor

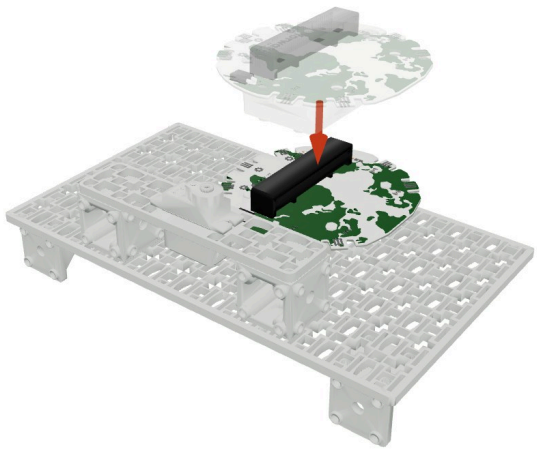

8

Attach the Breakout Board to the Base Plate behind the Cube Connector assembly. Note you may need to change the orientation of the Breakout Board to make room for the cables.



1 × Breakout Board (empty)

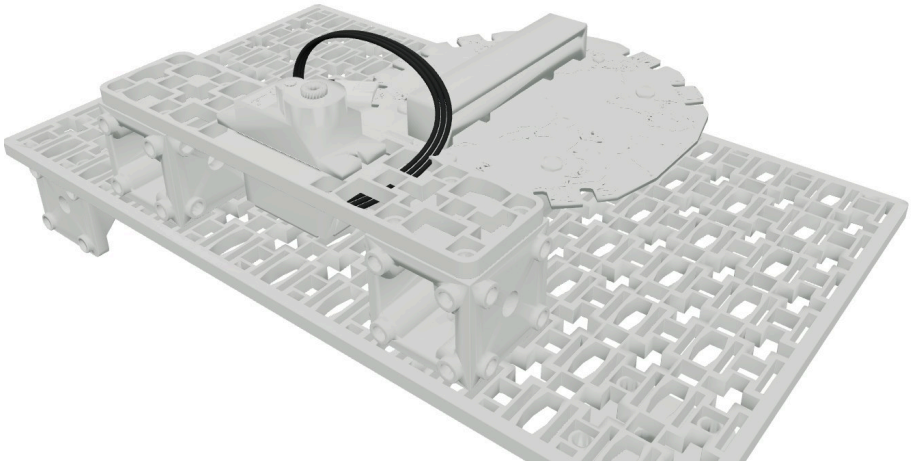

9

🔌 Connect the Servo Motor cable to the 'R' (right) Servo Motor port on the Breakout Board.

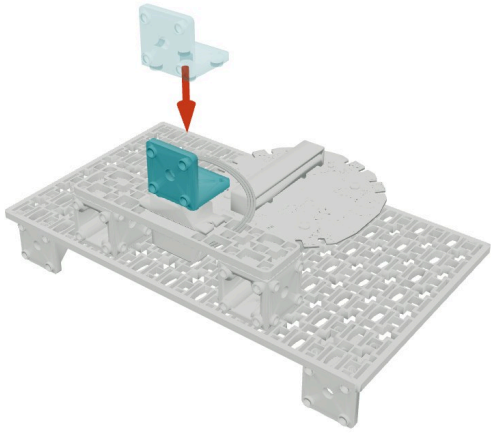

10

Attach a Corner Connector to the top of the Servo Motor by inserting the Servo Motor axle into one of the holes on the Corner Connector.

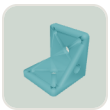

1 × Corner Connector

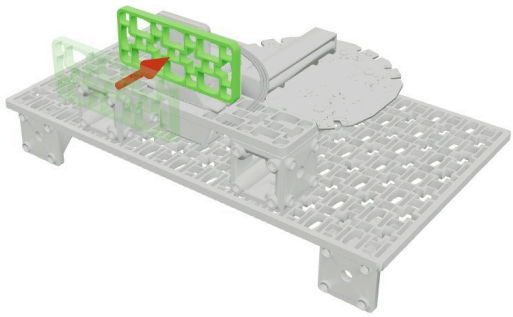

11

Attach a Small Frame to the exposed side of the Corner Connector.



1 × Small Frame

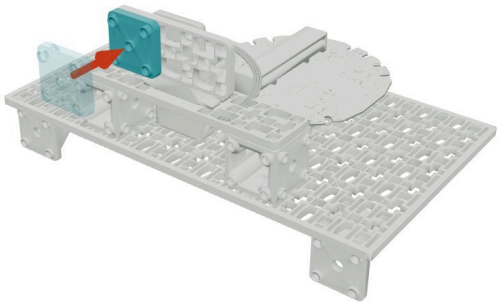

12

Attach a Back-to-Back Connector to one end of the Small Frame.

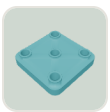

1 × Back-to-Back Connector

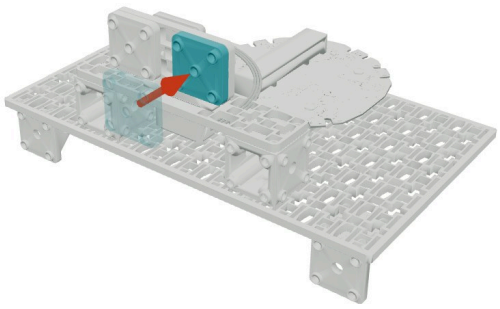

13

Attach another Back-to-Back Connector to the other end of the Small Frame.

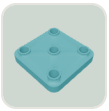

1 × Back-to-Back Connector

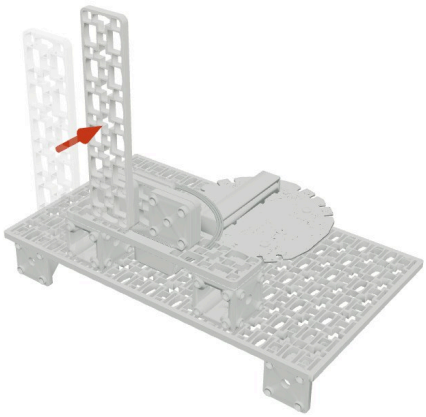

14

Attach a Medium Frame vertically to one of the Back-to-Back Connectors.



1 × Medium Frame

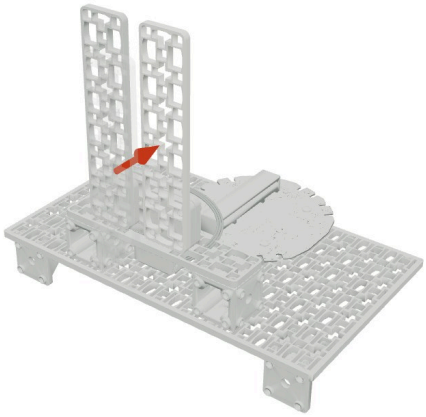

15

Attach another Medium Frame vertically to the other Back-to-Back Connector.



1 × Medium Frame

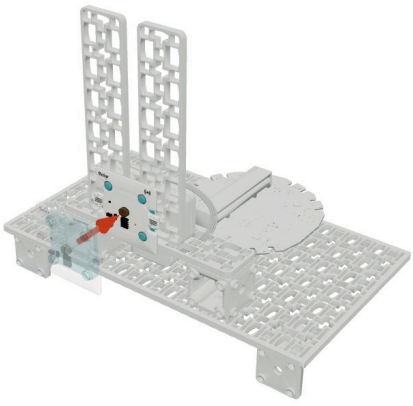

16

Attach the Solar Sensor across the front of both Medium Frames.



1 × Solar Sensor

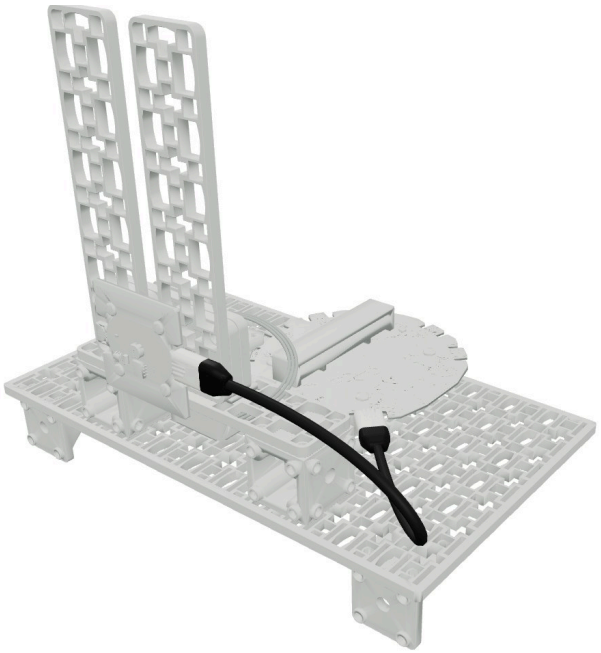

17

🔌 Use a Long Cable to connect the Solar Sensor to a Sensor Port on the Breakout Board.



1 × Long Cable Connector

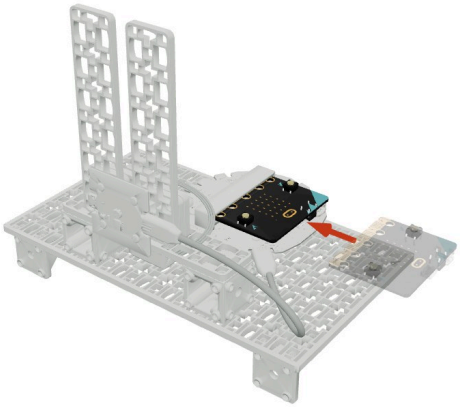

18

Insert a micro:bit into the edge connector on the Breakout Board.

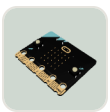

1 × micro:bit

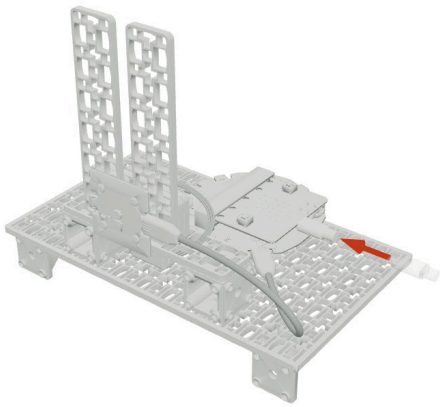

19

Insert the Micro USB Cable into the micro USB port on the micro:bit.



1 × Micro USB Cable