Water Quality

15 steps · 20 parts

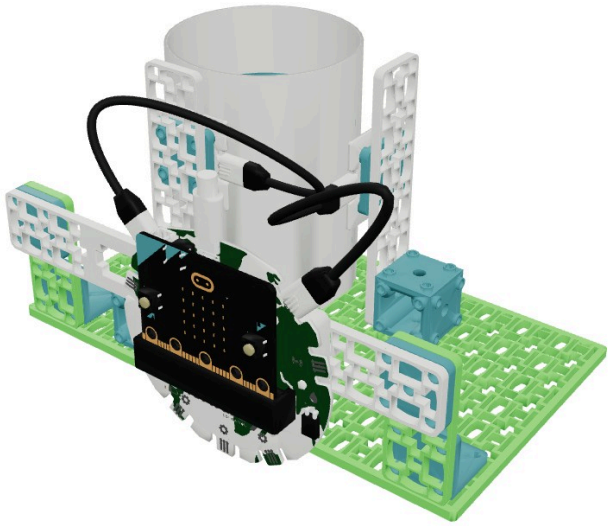

You will need

- 1 × Base Plate
- 2 × Cube Connector
- 2 × Corner Connector
- 2 × Back-to-Back Connector
- 2 × Small Frame
- 2 × Medium Frame
- 1 × Long Frame
- 1 × LED Light
- 1 × Solar Sensor
- 1 × Cup
- 2 × Long Cable Connector
- 1 × micro:bit

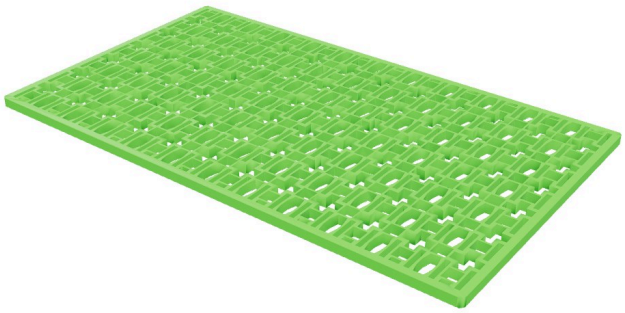

1

Start with a Base Plate flat on the build surface.



1 × Base Plate

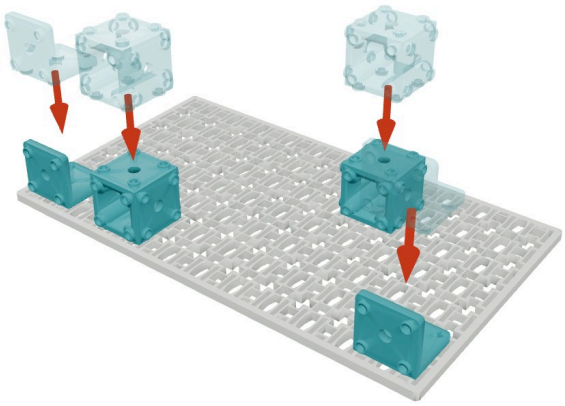

2

Add a Corner Connector to each corner along one side of the Base Plate. Then add two Cube Connectors in the positions shown.

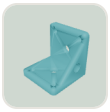

2 × Corner Connector



2 × Cube Connector

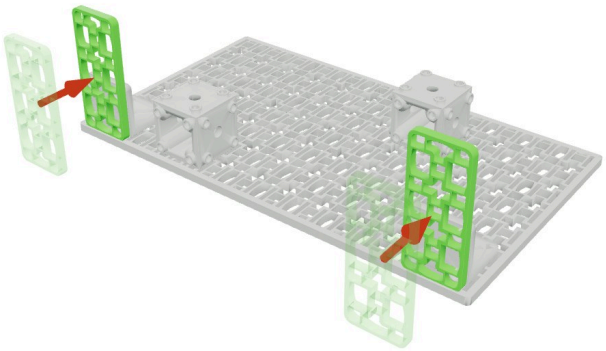

3

Attach a Small Frame places vertically to each Corner Connector.



2 × Small Frame

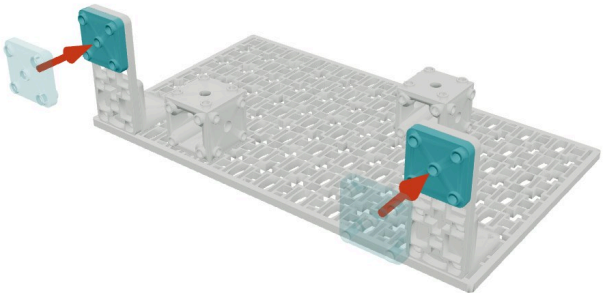

4

Attach a Back-to-Back Connector at the top of each Small Frame.

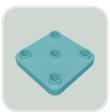

2 × Back-to-Back Connector

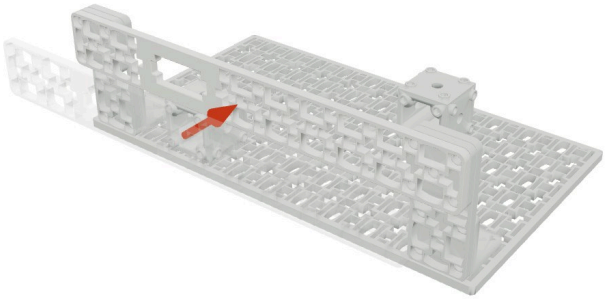

5

Attach a Long Frame to each Back-to-Back Connector so it spans across the assembly.



1 × Long Frame

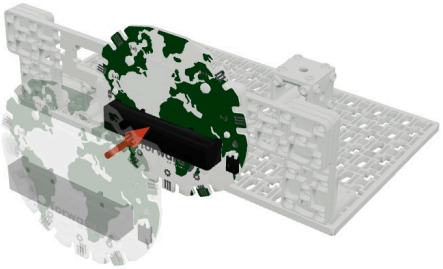

6

Attach the Breakout Board to the middle of the Long Frame, facing outward.



1 × Breakout Board (empty)

180°

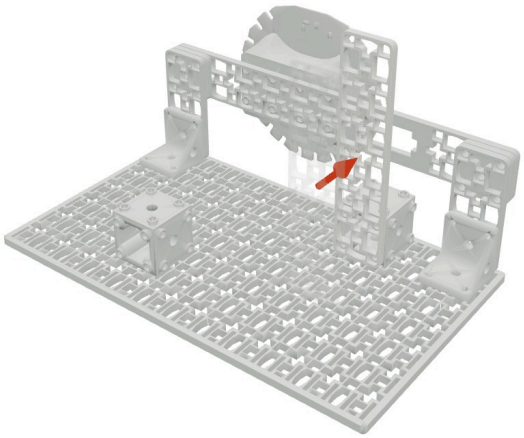

7

Turn your build around

Attach a Medium Frame positioned vertically to the Cube Connector, facing the opposite way as the Breakout Board.



1 × Medium Frame

8

Attach the Solar Sensor to the top of that Medium Frame.

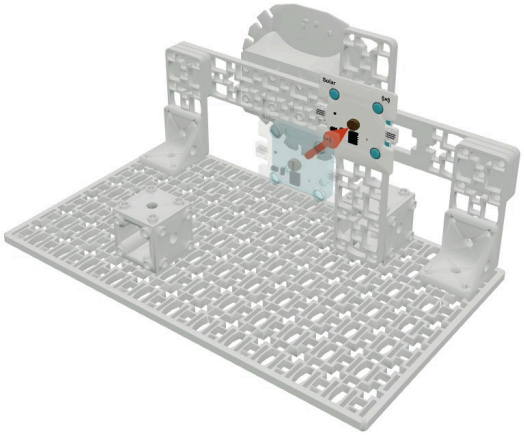



1 × Solar Sensor

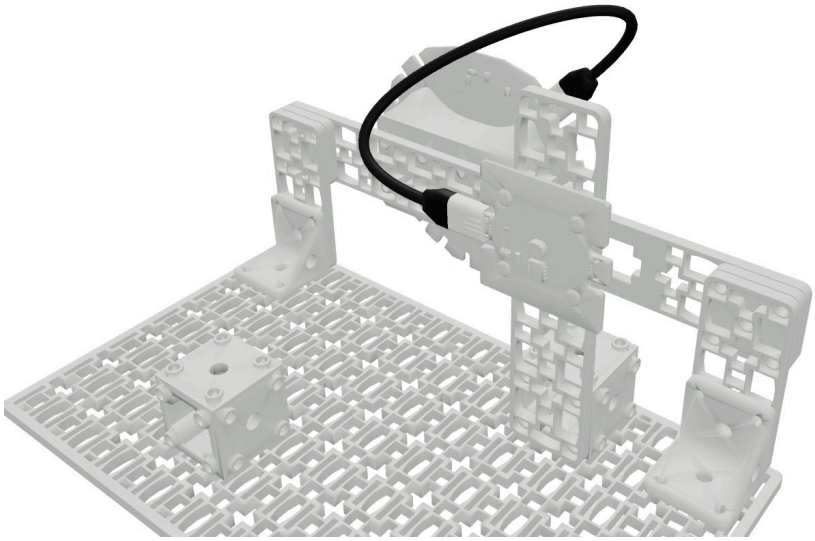

9

🔌 Connect the Solar Sensor to a sensor port on the Breakout Board.



1 × Long Cable Connector

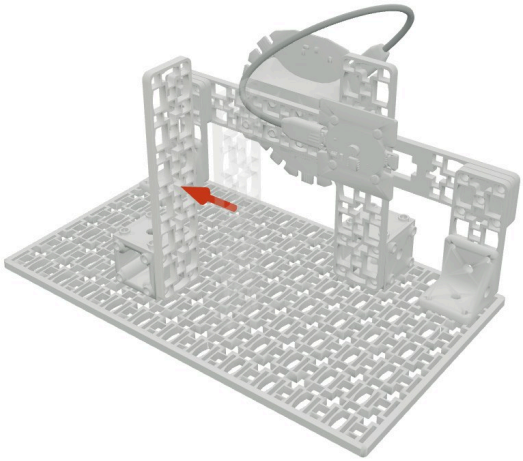

10

Attach another Medium Frame, positioned vertically to the other Cube Connector.



1 × Medium Frame

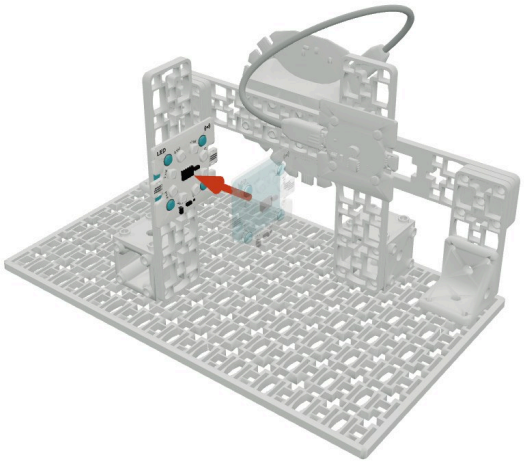

11

Attach the LED Light to the top of that Medium Frame.



1 × LED Light

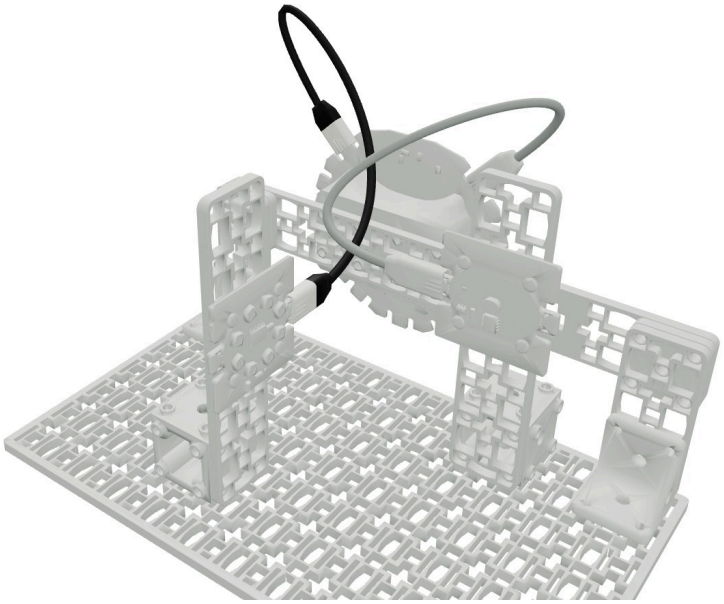

12

🔌 Connect the LED Light to a sensor port on the Breakout Board.



1 × Long Cable Connector

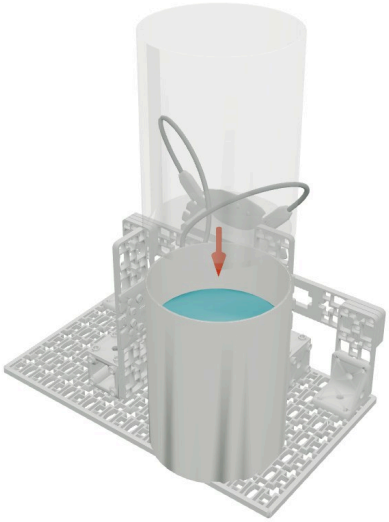

13

Add a cup with water to the project. It should be positioned between the Solar Sensor and LED Light.



1 × Cup

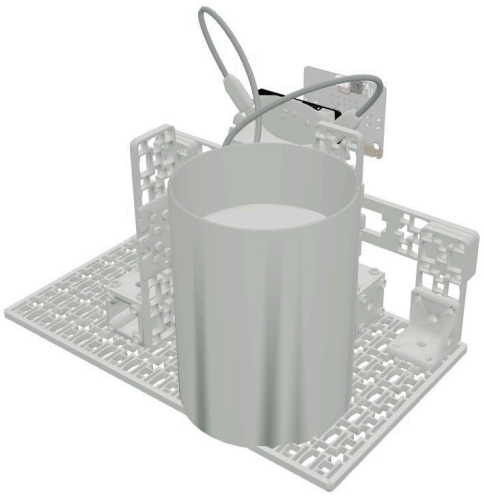

14

Insert a micro:bit into the edge connector on the Breakout Board.

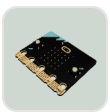

1 × micro:bit

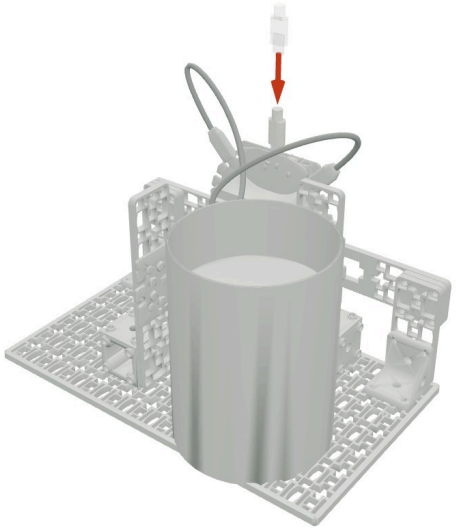

15

Connect the microUSB cable to the micro:bit and the other end into your computer.



1 × Micro USB Cable