Wildfire Detection Vehicle

24 steps · 27 parts

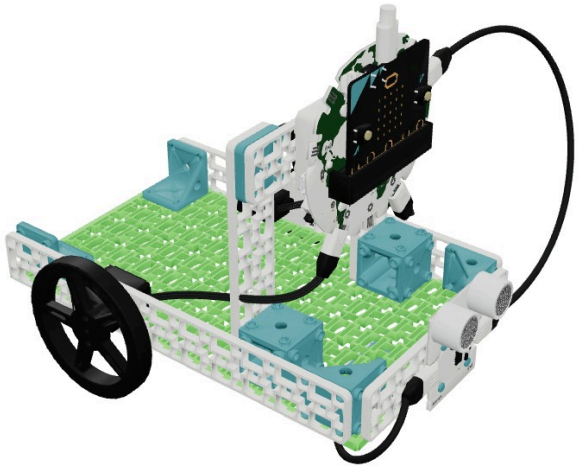

You will need

- 1 × Base Plate
- 2 × Cube Connector
- 4 × Corner Connector
- 2 × Back-to-Back Connector
- 4 × Medium Frame
- 2 × Long Frame
- 2 × Continuous Servo Motor
- 1 × Breakout Board
- 1 × Line (Infrared) Sensor
- 1 × Sonar Sensor

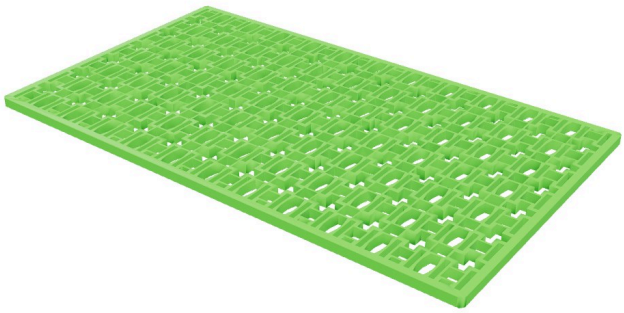

1

Start with a Base Plate



1 × Base Plate

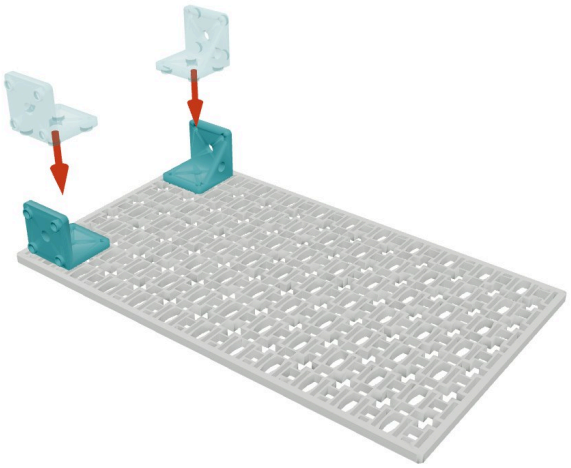

2

Add two Corner Connectors to the back two corners of the Base Plate.

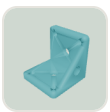

2 × Corner Connector

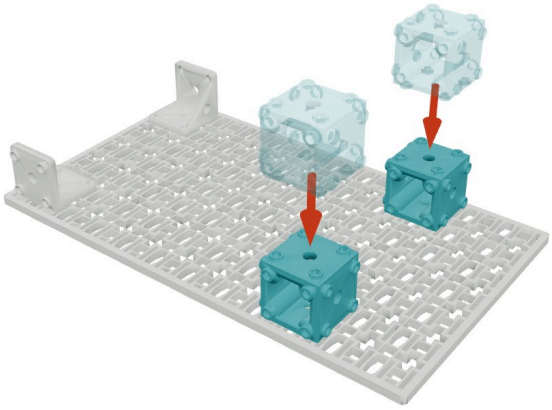

3

Add two Cube Connectors to the front side of the Base Plate, not quite at the front edge.



2 × Cube Connector

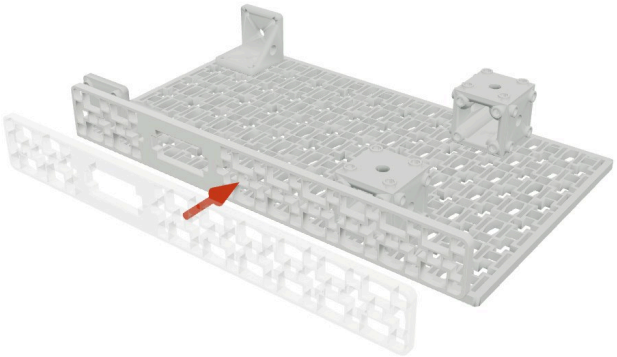

4

Add a Long Frame along the long edge of the Base Plate, using the Corner and Cube Connectors to attach it. Note the position of the Servo Motor hole in the Long Frame.



1 × Long Frame

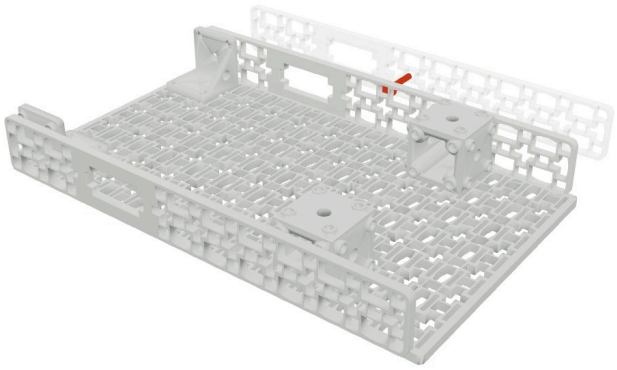

5

Add another Long Frame along the other long edge of the Base Plate, using the Corner and Cube Connectors to attach it. Note the position of the Servo Motor hole in the Long Frame.



1 × Long Frame

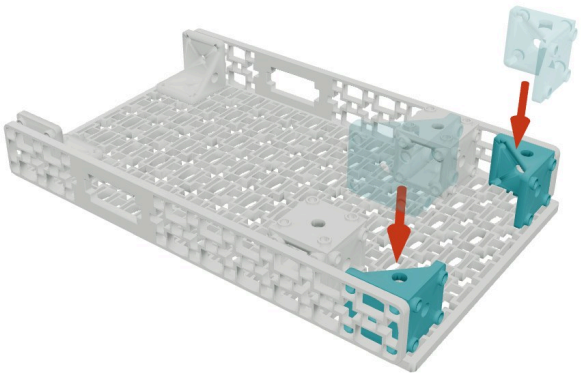

6

Add another two Corner Connectors to the assembly. One at the end of each Long Frame. The exposed side of the Corner Connector should be facing outward, towards the front.

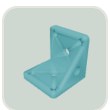

2 × Corner Connector

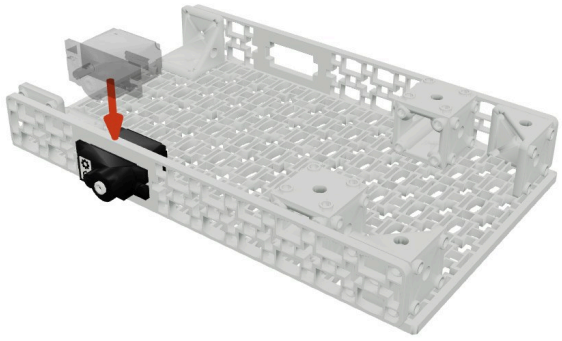

7

Insert one Continuous Servo Motor into the hole in the Long Frame. The Servo Motor cable should be inserted into the hole first.



1 × Continuous Servo Motor

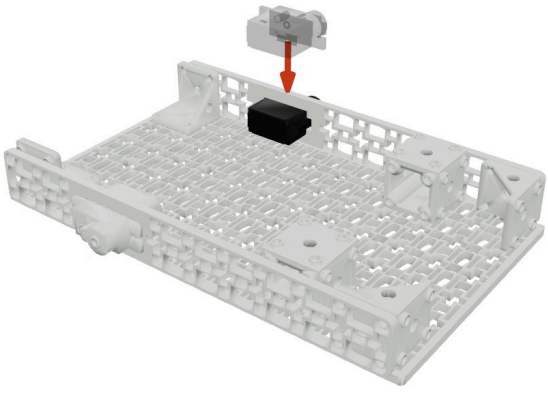

8

Insert the other Continuous Servo Motor into the hole in the Long Frame. The Servo Motor cable should be inserted into the hole first.



1 × Continuous Servo Motor

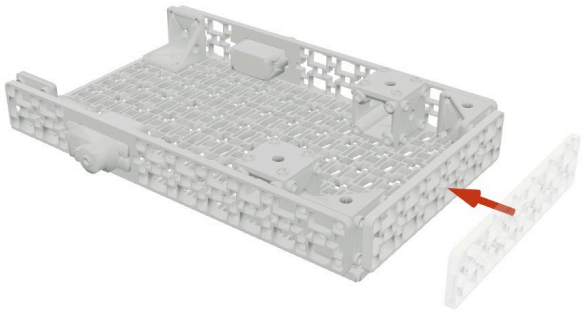

9

Attach one Medium Frame across the front of the assembly, using the two exposed Corner Connectors to secure it in place.



1 × Medium Frame

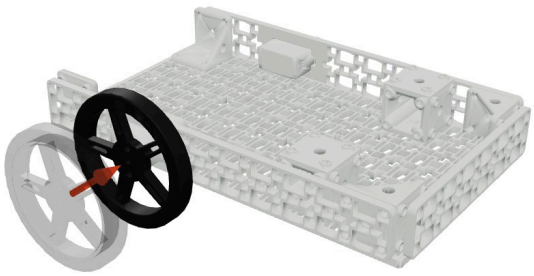

10

Attach one Wheel to the axle on the Servo Motor. You can use the screw and screwdriver to secure it in place.



1 × Wheel

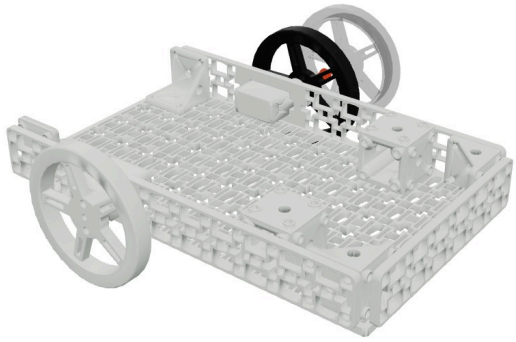

11

Attach the other Wheel to the axle on the Servo Motor. You can use the screw and screwdriver to secure it in place.



1 × Wheel

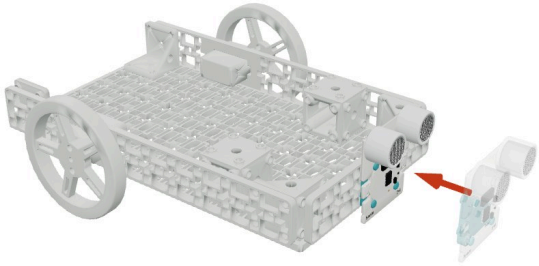

12

Attach the Sonar Sensor across the front of the Medium Frame.



1 × Sonar Sensor

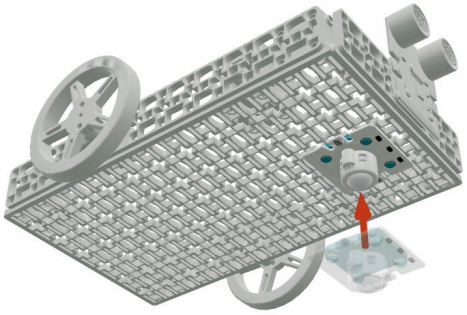

13

Turn your build over

Attach the Line Sensor to the bottom of the Base Plate. It will act as a third wheel.



1 × Line (Infrared) Sensor

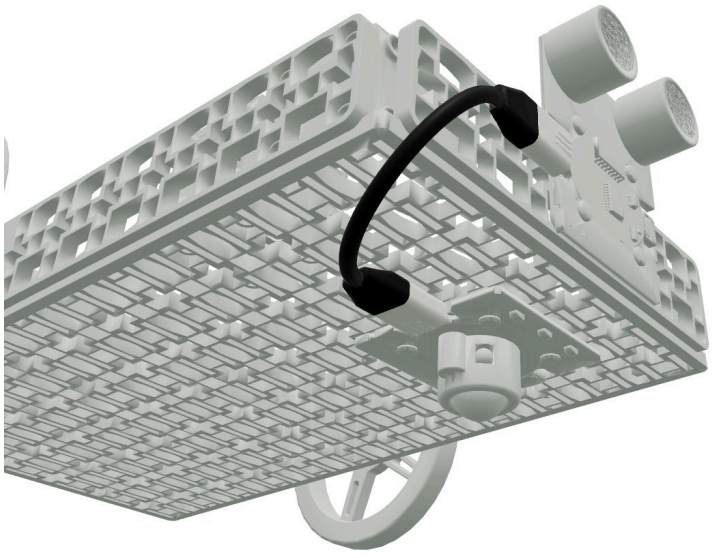

14

🔌 Connect the Sonar Sensor and Line Sensor using a short cable.



1 × Short Cable Connector

180°

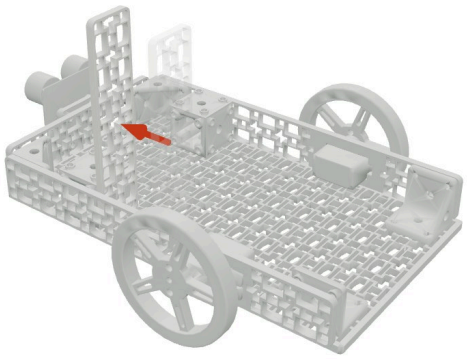

15

Turn your build around

Attach a Medium Frame, positioned vertically, to the back side of one of the Cube Connectors.



1 × Medium Frame

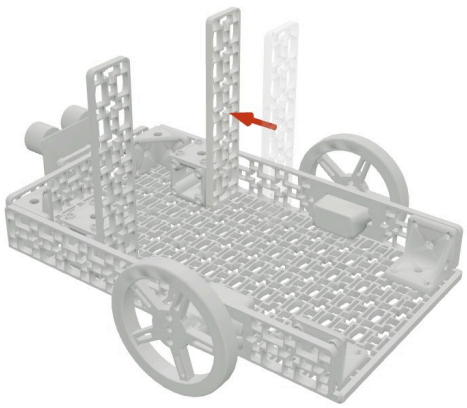

16

Attach another Medium Frame, positioned vertically, to the back side of the other Cube Connectors.



1 × Medium Frame

180°

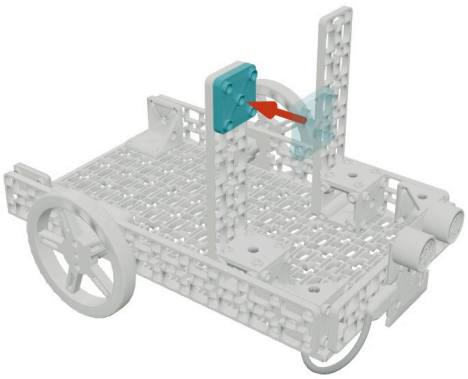

17

Turn your build around

Attach a Back-to-Back Connector to the top of one of the Medium Frames.



1 × Back-to-Back Connector

18

Attach another Back-to-Back Connector to the top of the other Medium Frames.

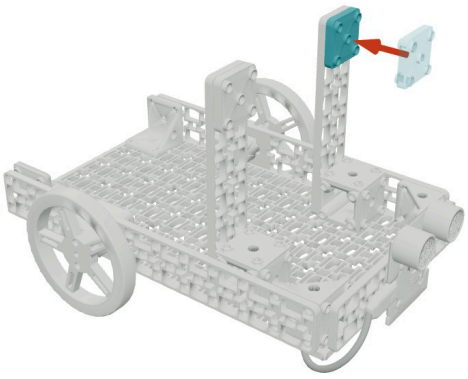

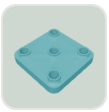

1 × Back-to-Back Connector

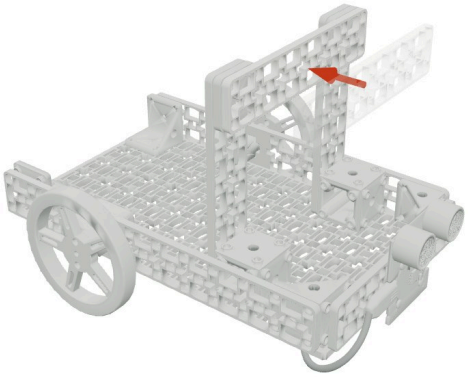

19

Attach a Medium frame across the top of the assembly, using the Back-to-Back connectors to secure it.



1 × Medium Frame

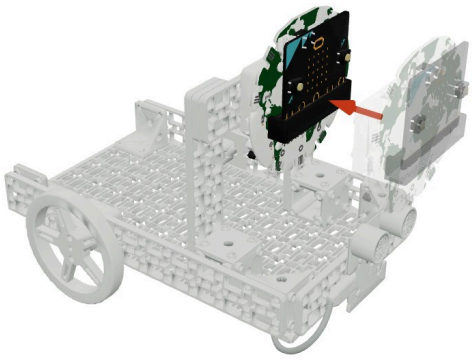

20

Attach the Breakout Board with a micro:bit to the front side of that Medium Frame.



1 × Breakout Board



21

Look at your build from above

🔌 Connect the Servo Motor Cable to the 'R' (right) motor port on the Breakout Board.

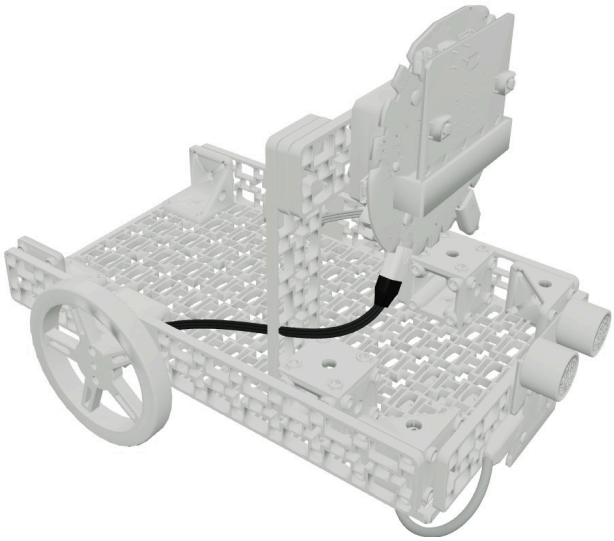

22

Look at your build from the side again

🔌 Connect the Servo Motor Cable to the 'L' (left) motor port on the Breakout Board.

90°

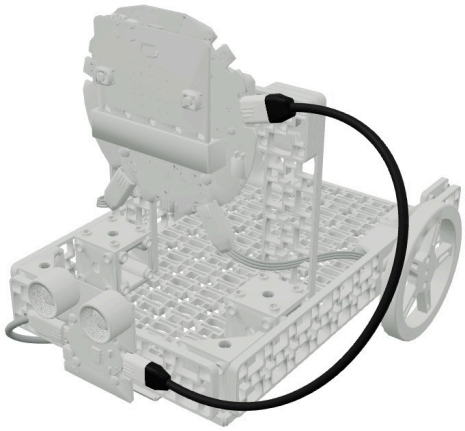

23

Turn your build a quarter turn clockwise

🔌 Connect the Sonar Sensor to a sensor port on the Breakout Board.



1 × Long Cable Connector

24

Insert the microUSB cable into the micro:bit and the other end to your computer.

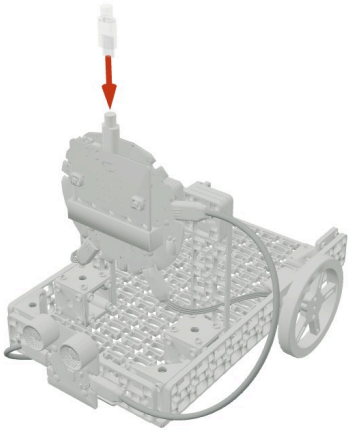



1 × Micro USB Cable